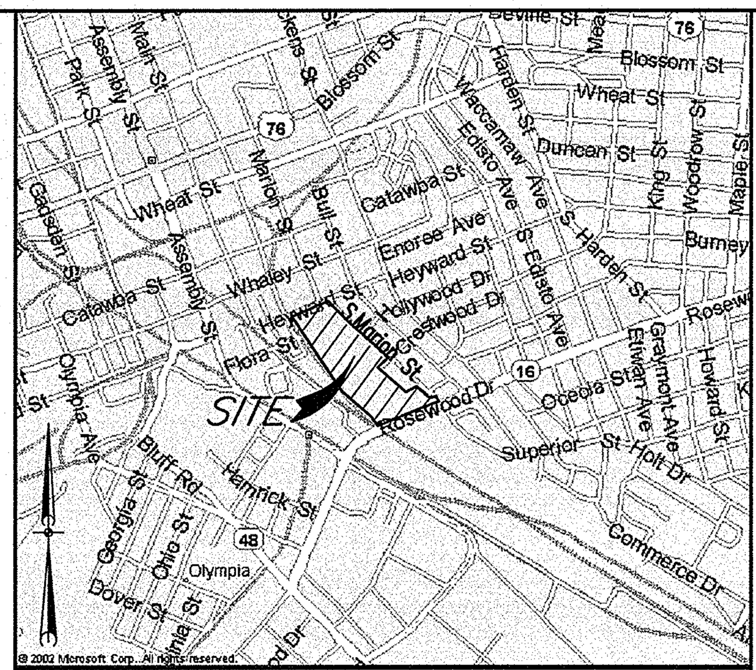

LOCATION MAP SCALE: 1" = 2,000'

ABBREVIATION WORD

A
AGGR — AGGREGATE
& — AND
APPD — APPROVED
APPROX — APPROXIMATE
A — AREA
ASPH — ASPHALT
@ — AT
AUTH — AUTHORIZED
AVE — AVENUE
AVG — AVERAGE
AZ — AZIMUTH

B
BL — BASE LINE
BRG — BEARING
BM — BENCH MARK
BES — BEVELED END SECTION
BET. — BETWEEN
BS — BOTH SIDES
BOT — BOTTOM
B/ — BOTTOM OF
BC — BOTTOM CHORD
BDY — BOUNDARY
BRK — BREAK
BRDG — BRIDGE
BLDG — BUILDING
BV — BALL VALVE
BFV — BUTTERFLY VALVE

C
CALC — CALCULATE
CB — CATCH BASIN
CIP — CAST–IN–PLACE
CI — CAST IRON
CAT. — CATALOG
CEM — CEMENT
CTR — CENTER
CL — CENTERLINE
CG — CENTER OF GRAVITY
C to C — CENTER TO CENTER
CHAM — CHAMFER
CO — CHANGE ORDER
CHAN — CHANNEL
CHK — CHECK
CV — CHECK VALVE
CHD — CHORD
CIR — CIRCLE
CIR — CIRCULAR
CIRC — CIRCUMFERENCE
CO — CLEANOUT
CW — CLOCKWISE
CTD — COATED
COL — COLUMN
COMB. — COMBINATION
CO — COMPANY
CONC — CONCRETE
CMP — CORRUGATED METAL PIPE
CMU — CONCRETE MASONRY UNIT
COND — CONDITION
CONN — CONNECT
CONT — CONTINUOUS
CD — CORD
CORP — CORPORATION
XSECT — CROSS SECTION
CU — CUBIC
CC — CUBIC CENTIMETER
CFM — CUBIC FEET PER MINUTE
CFS — CUBIC FEET PER SECOND
CU FT — CUBIC FOOT
CU IN. — CUBIC INCH
CU M — CUBIC METER
CU YD — CUBIC YARD
CUR — CURRENT

D
DEC — DECIMAL
DEG (OR °) — DEGREE
DEPT — DEPARTMENT
DSGN — DESIGN
DET — DETAIL
DEV — DEVELOP
DI — DROP INLET
DIAG — DIAGONAL
DIA (OR ø) — DIAMETER
DIM. — DIMENSION
DISCH — DISCHARGE
DIST — DISTANCE
DO — DITTO
DN — DOWN
DFTG — DRAFTING
DWG — DRAWING
DR — DRIVE
DI — DUCTILE IRON
DIP — DUCTILE IRON PIPE

E
EA — EACH
EF — EACH FACE
ES — EACH SIDE
EW — EACH WAY
E — EAST
EFF — EFFECTIVE
ELL — ELBOW
ELEC — ELECTRIC
ELEV — ELEVATION
ENGR — ENGINEER
EQ — EQUAL
EQUIP. (OR EQ) — EQUIPMENT
EQUIV — EQUIVALENT
EST — ESTIMATE
EXP — EXPANSION
EJ — EXPANSION JOINT
EXT — EXTERIOR

F
FES — FLARED END SECTION
F to F — FACE TO FACE
FT (OR ') — FEET
FPM — FEET PER MINUTE
FPS — FEET PER SECOND
FRP — FIBERGLASS REINFORCED PLASTIC
FLD — FIELD
FIG. — FIGURE

F CONT.
FIL — FILLET
FLT — FILTER
FIN. — FINISH
FF — FINISH FLOOR
FH — FIRE HYDRANT
FLG — FLANGE
FL — FLUID
FWD — FORWARD
FDN — FOUNDATION
FM — FORCEMAIN
FREQ — FREQUENCY
FR — FRONT

G
GAL — GALLON
GALV — GALVANIZE
GEN — GENERAL
GR — GRADE
GL — GRADE LINE
G — GRAVITY
GRD — GROUND

H
HDPE — HIGH DENSITY POLYETHYLENE
H.P. — HIGH POINT
HOR — HORIZONTAL
HR — HOUR
HW — HEADWALL
HYD — HYDRAULIC

I
IN. (OR ") — INCH
IPS — INCHES PER SECOND
INCL — INCLUDE
IND — INDUSTRIAL
INFO — INFORMATION
ID — INSIDE DIAMETER
IF — INSIDE FACE
IINT — INTERSECT
INV — INVERT
I — IRON

J
JCT — JUNCTION
JB — JUNCTION BOX

L
LAT — LATITUDE
LT — LEFT
L.P. — LOW POINT

M
MH — MANHOLE
MAN. — MANUAL
MFR — MANUFACTURE
MATL — MATERIAL
MAX — MAXIMUM
MECH — MECHANICAL
MED — MEDIAN
MET. — METAL
M — METER
MI — MILES
MPH — MILE PER HOUR
MIN — MINIMUM
MIN (OR ') — MINUTE
MISC — MISCELLANEOUS
MOD — MODEL
MULT — MULTIPLE

N
NEG — NEGATIVE
NIC — NOT IN CONTRACT
NOM — NEUTRAL
NOR — NORMAL
N — NORTH
NTS — NOT TO SCALE
NO. (OR #) — NUMBER

O
O/C — ON CENTER
O/S — OFFSET
OP'NG — OPENING
OPP — OPPOSITE
ORIG — ORIGINAL
OD — OUTSIDE DIAMETER
OF — OUTSIDE FACE
OA — OVERALL
OHP — OVERHEAD POWER
OVF — OVERFLOW

P
PERM — PERMANENT
PERP — PERPENDICULAR
PL — PROPERTY LINE
LB (OR #) — POUND
PSI — POUNDS PER SQUARE INCH
PWR — POWER
PFD — PREFERRED
PREP — PREPARE
PRESS. — PRESSURE
PCO — PRESSURE CLEANOUT
PT — PRESSURE TREATED
PROC — PROCESS
PROD — PRODUCTION
PF — PROFILE
PROJ — PROJECT

R
R — RADIUS
RR — RAILROAD
RECD — RECEIVED
REC — RECORD
REF — REFERENCE
REF L — REFERENCE LINE
RCP — REINFORCED CONCRETE PIPE
REINF — REINFORCING
REM — REMOVE
REQ — REQUIRE
REQD — REQUIRED
REV — REVISION(REVISED)
RJ — RESTRAINED JOINT
RRMP — RAILROAD MILE POST
RT — RIGHT
RH — RIGHT HAND
R/W — RIGHT OF WAY

S
SCH — SCHEDULE
SL — SEA LEVEL
SEC (OR ") — SECOND
SECT — SECTION
SD — STORM DRAIN
SHW — STRAIGHT HEADWALL
SIM — SIMILAR
S — SOUTH
SQ — SQUARE
SS — SANITARY SEWER
STD — STANDARD
STA — STATION
SUR — SURFACE
SY — SQUARE YARD
SYM — SYMBOL
SW — SIDEWALK

T
TAN. — TANGENT
TPR — TAPER
THK — THICK
KIP — THOUSAND POUND
T/ — TOP OF
TOT — TOTAL
TYP — TYPICAL

U
U — UNIT
UNO — UNLESS NOTED OTHERWISE

V
V — VALVE
VAR — VARIABLE
VERT — VERTICAL
VOL — VOLUME

W
WT — WEIGHT
W — WEST
W — WIDTH
W/ — WITH

Y
YD — YARD
YH — YARD HYDRANT
YI — YARD INLET
YR — YEAR

DETAIL REFERENCES

1 / C# — DETAIL NUMBER; SHEET WHERE DETAIL APPEARS

DETAIL
SCALE: NONE
1 / C# — DETAIL NUMBER; SHEET WHERE DETAIL IS NOTED

TYP — USED TO INDICATE THAT DETAIL IS TYPICAL AT MULTIPLE PLACES.

MATERIALS

EXISTING GRADE
FINISHED GRADE
GRANULAR FILL (ROCK/GRAVEL)
CONCRETE
REGULAR DUTY ASPHALT PAVEMENT
HEAVY DUTY ASPHALT PAVEMENT
RIP RAP

STRUCTURE

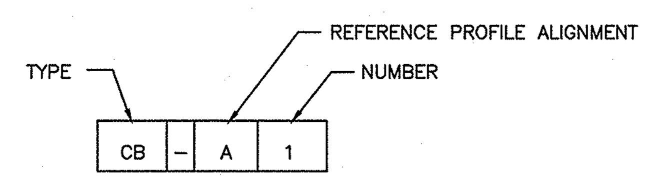

PIPING

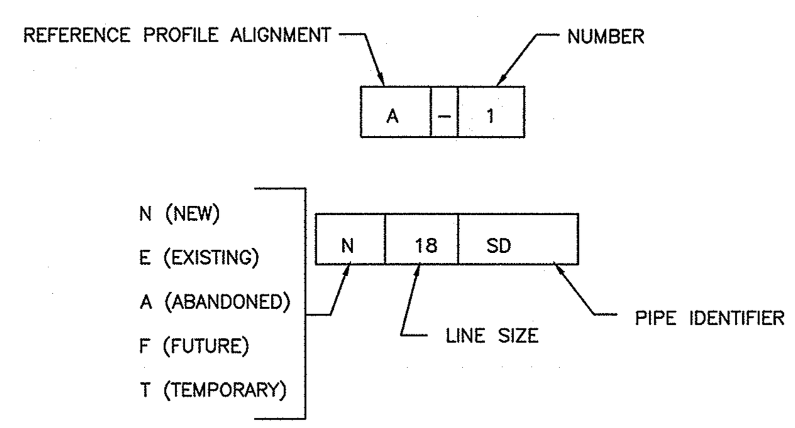

IDENTIFIER	DESCRIPTION
DB	DUCT BANK
DRN	DRAIN
FM	FORCEMAIN
G	GAS
SD	STORM DRAIN
S	SANITARY SEWER
W	WATER

GENERAL NOTES

REFERENCE IS MADE TO THE FOLLOWING:

- RENOVATE SOFTBALL FIELD AT BECKHAM FIELD FOR UNIVERSITY OF SOUTH CAROLINA CONSTRUCTION PLANS BY BP BARBER DATED MARCH 2011.
- BOUNDARY AND TOPOGRAPHIC PREPARED BY B.P. BARBER & ASSOCIATES, INC. DATED 5/16/07, LAST REVISED 8/16/07.
- UTILITY SURVEY PREPARED BY B.P. BARBER & ASSOCIATES, INC. DATED 10/4/07, LAST REVISED 2/24/09.

1. ALL ELEVATIONS SHOWN ARE BASED ON NAVD88.
2. VERIFY UTILITY LOCATIONS AND ELEVATIONS BEFORE CONSTRUCTION. IF CONDITIONS DIFFER SIGNIFICANTLY FROM THOSE SHOWN ON THE PLANS, NOTIFY THE ENGINEER IMMEDIATELY.
3. LIMITS OF DISTURBANCE = 1.4 ACRES.

LEGEND

	EXISTING	NEW
CONTOURS (1' & 2')	802	802
CONTOURS (5' & 10')	800	800
EDGE OF PAVEMENT		
CURB & GUTTER		
CENTERLINE OF ROADWAY		
PROPERTY LINE		
RIGHT–OF–WAY		
LIMITS OF DISTURBANCE		
SILT FENCE		SF
WETLANDS		
WETLANDS BUFFER		
FENCE LINE	X X X X X	XX XX XX XX
GUARD RAIL		
TREE LINE		
SURFACE DRAINAGE FLOW		
STORM DRAINAGE	18" RCP	N18SD
CATCH BASIN	CB	CB
DROP INLET	DI	DI
YARD INLET	YI	YI
JUNCTION BOX	JB	JB
SANITARY SEWER	8S	N8S
SEWER FORCE MAIN	8FM	N8FM
SEWER MANHOLE	MH	
SEWER VALVE		
AIR RELEASE MANHOLE	ARV	
SEWER CLEANOUT	CO	CO
WATER LINE	12W	N12W
FIRE HYDRANT	FH	FH
WATER METER	WM	
WATER VALVE	WV	
GAS LINE	2G	N2G
GAS VALVE	GV	
UNDERGROUND POWER	UP	
OVERHEAD POWER	OHP	
SIGN		
POWER POLE	PP	
GUY WIRE		
GUY POLE	GP	
LAMP POLE	LMP	
SERVICE POLE	SP	
LIGHT POLE	LP	
ELECTRIC MANHOLE	E	
ELECTRIC TRANSFORMER	TRN	
ELECTRIC BOX	EBOX	
UNDERGROUND TELEPHONE	UT	
TELEPHONE PEDESTAL	TPED	
TELEPHONE MANHOLE	T TMH	
UNDERGRD. CABLE TV	CTV	
CABLE TV PEDESTAL	CTV PED	
MAIL BOX	MB	
UNDERGRD. FIBER OPTIC LINE	U–FOC	
UNDERGRD. TRAFFIC LOOP	U–TL	
SOIL BORING	SB#	

QUACKENBUSH
ARCHITECTS+PLANNERS
1217 Hampton Street T: 803.771.2999
Columbia, SC 29201 F: 803.771.2858

CHA
III Winners Circle T: 518.453.4500
Albany, NY 12205 F: 518.458.1735

URS | BP Barber
101 RESEARCH DRIVE
COLUMBIA, SC
29203-9389
803-254-4400

CORPORATE SEAL
SOUTH CAROLINA CERTIFICATE OF AUTHORIZATION
B.P. BARBER & ASSOCIATES, INC.
No. C00020

3-30-12
DATE

A/E SEAL
SOUTH CAROLINA REGISTERED PROFESSIONAL ENGINEER
No. 23633
CHRISTOPHER CHARLES SMITH

SIGNATURE

PROJECT TITLE

UNIVERSITY OF SOUTH CAROLINA

SOFTBALL STADIUM CONSTRUCTION

BID SET

Conditions of Use: This drawing and the design thereon are the property of Quackenbush Architects + Planners. The reproduction, copying, or use of this drawing without the written consent of Quackenbush Architects + Planners is prohibited and any infringement will be subject to legal action.

REVISIONS

NO	REVISION	DATE

SHEET INFORMATION

Date	03.16.12
Project No.	11.122.00
Scale	1"=20'
Drawn By	SSJ
Checked By	CCS
State Project No.	H27-6088-MJ
URS/BPBarber Project#	46422193

TITLE

GENERAL NOTES, LEGEND, SYMBOLS & ABBREVIATIONS

DWG. NO. 35,870-B89

SHEET NO.

C-1

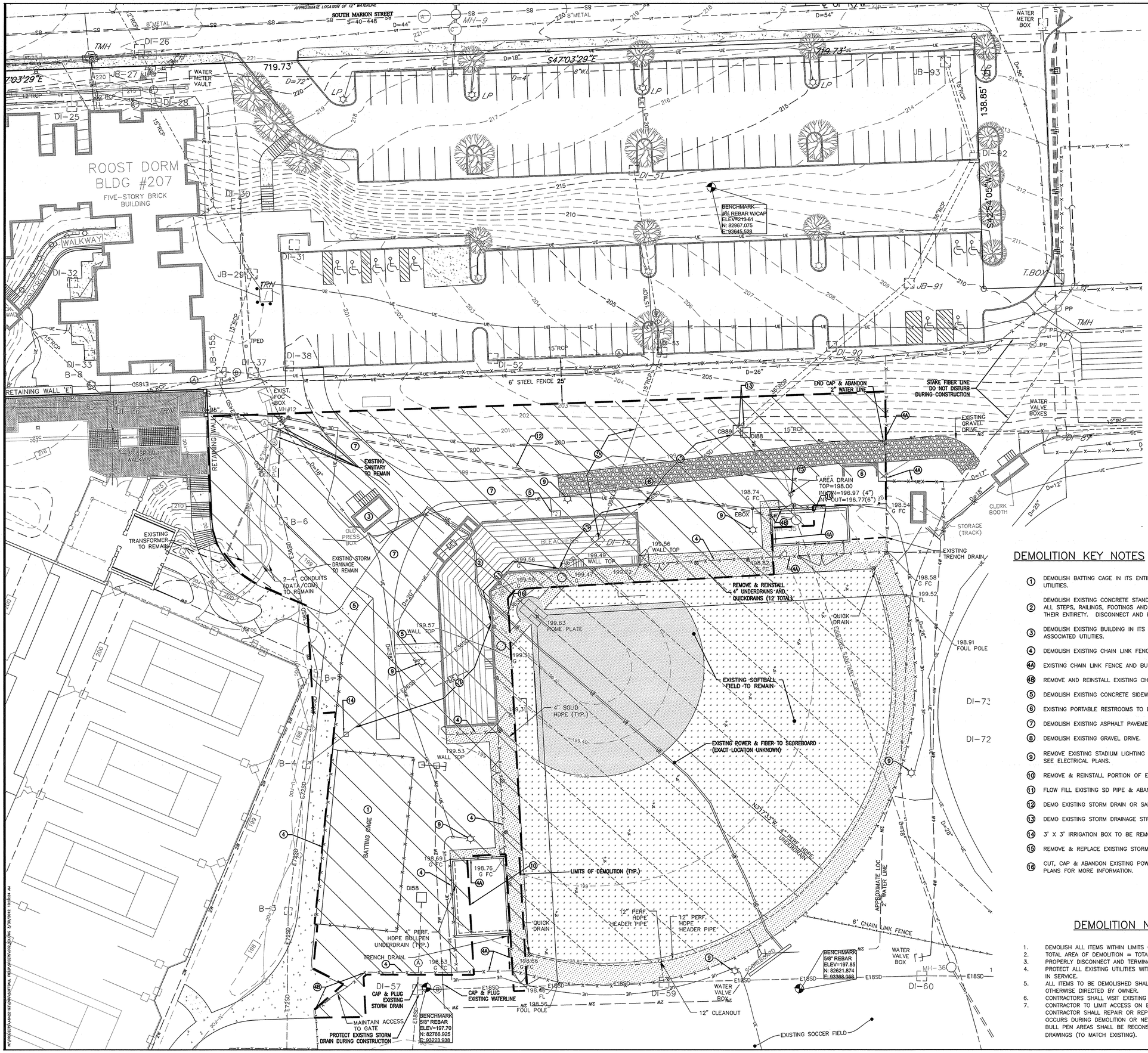

LEGEND

- SIDEWALK
- BUILDINGS
- STORM DRAIN — N18SD —
- SANITARY SEWER — N8S —
- WATER — N6W —
- CONTOUR — 216 —
- SPOT ELEVATION 199.50
- GRASS
- SKINNED INFIELD
- WARNING TRACK
- LIMITS OF DEMOLITION

DEMOLITION KEY NOTES

1. DEMOLISH BATTING CAGE IN ITS ENTIRETY INCLUDING ALL ASSOCIATED FOOTINGS AND UTILITIES.
2. DEMOLISH EXISTING CONCRETE STANDS, DUGOUTS & ASSOCIATED BUILDINGS, INCLUDING ALL STEPS, RAILINGS, FOOTINGS AND UTILITIES. REMOVE ALL FENCING & RAILS IN THEIR ENTIRETY. DISCONNECT AND REMOVE ALL ELECTRICAL & FIBER UNDER STADIUM.
3. DEMOLISH EXISTING BUILDING IN ITS ENTIRETY, INCLUDING ALL STEPS, FOOTINGS AND ASSOCIATED UTILITIES.
4. DEMOLISH EXISTING CHAIN LINK FENCE INCLUDING ALL ASSOCIATED FOOTINGS.

4A. EXISTING CHAIN LINK FENCE AND BULLPEN NETTING TO REMAIN.

4B. REMOVE AND REINSTALL EXISTING CHAIN LINK FENCE.

5. DEMOLISH EXISTING CONCRETE SIDEWALK.
6. EXISTING PORTABLE RESTROOMS TO BE REMOVED BY OWNER.
7. DEMOLISH EXISTING ASPHALT PAVEMENT.
8. DEMOLISH EXISTING GRAVEL DRIVE.
9. REMOVE EXISTING STADIUM LIGHTING AND FOUNDATION (6 TOTAL). SEE ELECTRICAL PLANS.
10. REMOVE & REINSTALL PORTION OF EXISTING BULLPEN.
11. FLOW FILL EXISTING SD PIPE & ABANDON IN PLACE.
12. DEMO EXISTING STORM DRAIN OR SANITARY PIPE.
13. DEMO EXISTING STORM DRAINAGE STRUCTURES.
14. 3' X 3' IRRIGATION BOX TO BE REMOVED.
15. REMOVE & REPLACE EXISTING STORM DRAINAGE AS NECESSARY.
16. CUT, CAP & ABANDON EXISTING POWER & FIBER TO SCOREBOARD. SEE ELECTRICAL PLANS FOR MORE INFORMATION.

DEMOLITION NOTES

1. DEMOLISH ALL ITEMS WITHIN LIMITS OF DEMOLITION WHICH INTERFERE WITH NEW WORK.
2. TOTAL AREA OF DEMOLITION = TOTAL AREA OF LAND DISTURBANCE = 1.54 ACRES.
3. PROPERLY DISCONNECT AND TERMINATE ALL EXISTING UTILITIES PRIOR TO DEMOLITION.
4. PROTECT ALL EXISTING UTILITIES WITHIN LIMITS OF DEMOLITION WHICH ARE TO REMAIN IN SERVICE.
5. ALL ITEMS TO BE DEMOLISHED SHALL BE PROPERLY DISPOSED OFF-SITE, UNLESS OTHERWISE DIRECTED BY OWNER.
6. CONTRACTORS SHALL VISIT EXISTING SITE PRIOR TO BIDDING.
7. CONTRACTOR TO LIMIT ACCESS ON EXISTING SOFTBALL FIELD AND SOCCER FIELD. CONTRACTOR SHALL REPAIR OR REPLACE ANY DAMAGE TO EXISTING FIELDS THAT OCCURS DURING DEMOLITION OR NEW CONSTRUCTION. WARNING TRACK AREAS AND BULL PEN AREAS SHALL BE RECONSTRUCTED AND MODIFIED AS INDICATED ON CIVIL DRAWINGS (TO MATCH EXISTING).

QUACKENBUSH ARCHITECTS+PLANNERS
1217 Hampton Street T: 803.771.2999
Columbia, SC 29201 F: 803.771.2858

CHA
III Winners Circle T: 518.453.4500
Albany, NY 12205 F: 518.458.1735

URS | BP Barber
101 RESEARCH DRIVE
COLUMBIA, SC
29203-9389
803-254-4400

CORPORATE SEAL

SOUTH CAROLINA B.P. BARBER & ASSOCIATES, INC. No. C00020 CERTIFICATE OF AUTHORIZATION

3-30-12
DATE

A/E SEAL

SOUTH CAROLINA REGISTERED PROFESSIONAL ENGINEER No. 23633 CHRISTOPHER CHARLES SMITH

SIGNATURE

PROJECT TITLE

UNIVERSITY OF SOUTH CAROLINA

SOFTBALL STADIUM CONSTRUCTION

BID SET

Conditions of Use: This drawing and the design thereon are the property of Quackenbush Architects + Planners. The reproduction, copying, or use of this drawing without the written consent of Quackenbush Architects + Planners is prohibited and any infringement will be subject to legal action.

REVISIONS

NO	REVISION	DATE

SHEET INFORMATION	
Date	03.16.12
Project No.	11.122.00
Scale	1"=20'
Drawn By	SSJ
Checked By	CCS
State Project No.	H27-6088-MJ
URS/BPBarber Project#	46422193

TITLE

EXISTING & DEMOLITION PLAN

DWG. NO. 35.870-B89

SHEET NO.

C-2

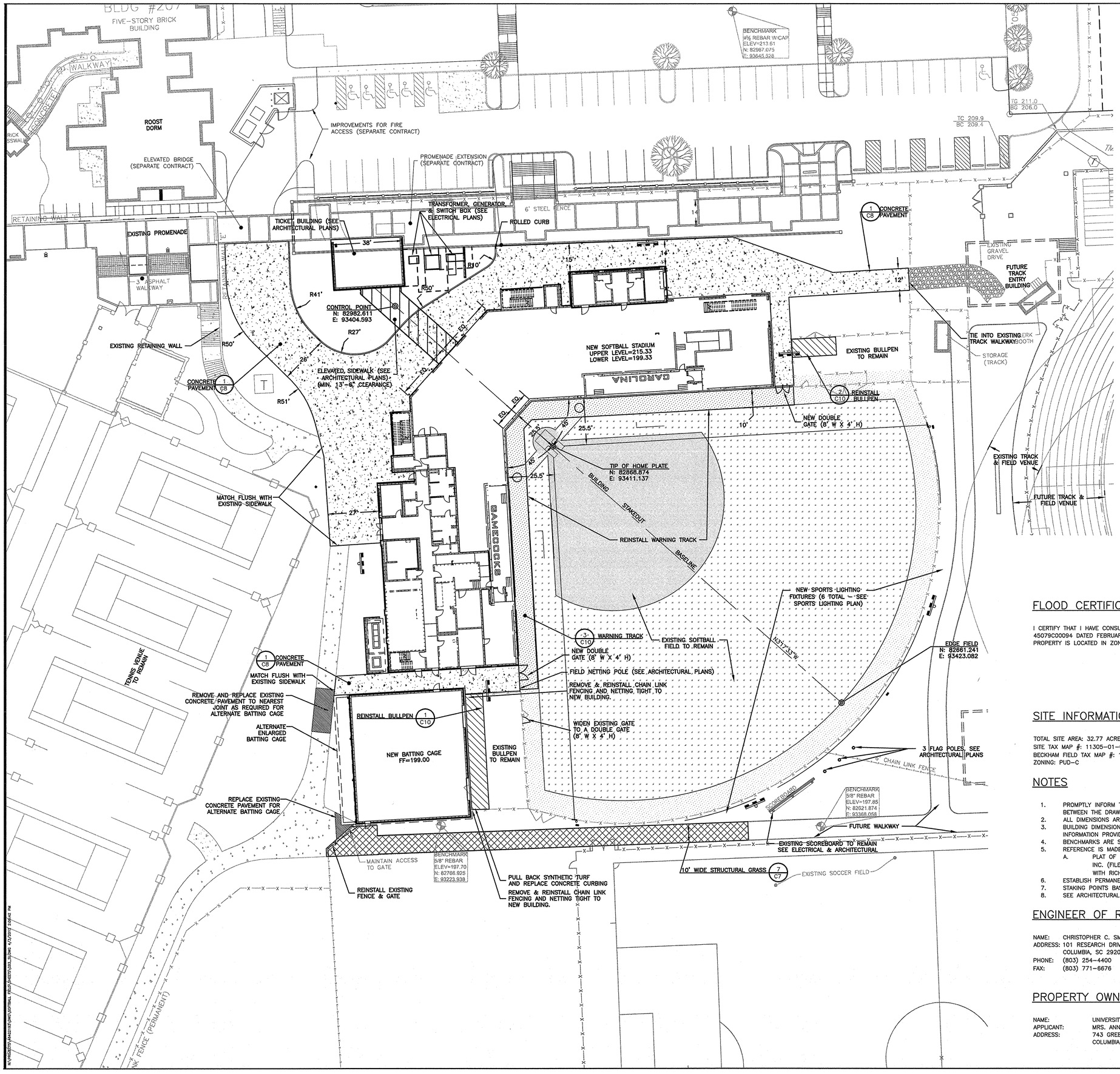

LEGEND

	EXISTING	NEW
CONCRETE		
STRUCTURAL GRASS		
BUILDINGS		
WARNING TRACK		
GRASS		
SKINNED INFIELD		

0' 20' 40'
GRAPHIC SCALE

S.C. GRID NORTH NAD 83

FLOOD CERTIFICATION:

I CERTIFY THAT I HAVE CONSULTED THE FEMA FLOOD INSURANCE MAP COMMUNITY PANEL 45079C00094 DATED FEBRUARY 20, 2002 AND TO THE BEST OF MY KNOWLEDGE THE SUBJECT PROPERTY IS LOCATED IN ZONE X.

CHRISTOPHER C. SMITH, PE — 4-3-12 DATE

SITE INFORMATION:

TOTAL SITE AREA: 32.77 ACRES.
SITE TAX MAP #: 11305-01-01 & 02, 11305-02-01, 11305-14-19
BECKHAM FIELD TAX MAP #: 11305-14-19
ZONING: PUD-C

NOTES

1. PROMPTLY INFORM THE ENGINEER OF ANY DISCREPANCIES OR CONFLICTS DISCOVERED BETWEEN THE DRAWINGS OR SPECIFICATIONS.
2. ALL DIMENSIONS ARE TO THE FACE OF THE CURB.
3. BUILDING DIMENSIONS, SIZE AND LOCATIONS ARE BASED ON ARCHITECTURAL DESIGN INFORMATION PROVIDED BY QUACKENBUSH ARCHITECTS & PLANNERS.
4. BENCHMARKS ARE SHOWN ON SHEET C2.
5. REFERENCE IS MADE TO:
   A. PLAT OF BOUNDARY SURVEY PERFORMED BY BP BARBER & ASSOCIATES, INC. (FILE # 34,519-B83) FOR THE UNIVERSITY OF SOUTH CAROLINA FILED WITH RICHLAND COUNTY REGISTER OF DEEDS BOOK # 1418-3986.
6. ESTABLISH PERMANENT GRASSING IN ALL AREAS DISTURBED BY CONSTRUCTION.
7. STAKING POINTS BASED ON ASSUMED DATUM.
8. SEE ARCHITECTURAL DRAWINGS FOR ADDITIONAL CHAIN LINK FENCING.

ENGINEER OF RECORD:

NAME: CHRISTOPHER C. SMITH, P.E.
ADDRESS: 101 RESEARCH DRIVE
COLUMBIA, SC 29202
PHONE: (803) 254-4400
FAX: (803) 771-6676

PROPERTY OWNER/DEVELOPER:

NAME: UNIVERSITY OF SOUTH CAROLINA
APPLICANT: MRS. ANN DERRICK
ADDRESS: 743 GREENE STREET
COLUMBIA, SC 29208

QUACKENBUSH ARCHITECTS+PLANNERS
1217 Hampton Street T: 803.771.2999
Columbia, SC 29201 F: 803.771.2858

CHA
III Winners Circle T: 518.453.4500
Albany, NY 12205 F: 518.458.1735

URS | BP Barber
101 RESEARCH DRIVE
COLUMBIA, SC
29203-9389
803-254-4400

CORPORATE SEAL
SOUTH CAROLINA — BP BARBER & ASSOCIATES, INC. — No. C00020 — CERTIFICATE OF AUTHORIZATION
4-3-12
DATE

A/E SEAL
SOUTH CAROLINA — PROFESSIONAL ENGINEER — No. 23633 — CHRISTOPHER CHARLES SMITH
SIGNATURE

PROJECT TITLE

UNIVERSITY OF SOUTH CAROLINA

SOFTBALL STADIUM CONSTRUCTION

BID SET

Conditions of Use: This drawing and the design thereon are the property of Quackenbush Architects + Planners. The reproduction, copying, or use of this drawing without the written consent of Quackenbush Architects + Planners is prohibited and any infringement will be subject to legal action.

REVISIONS

NO	REVISION	DATE

SHEET INFORMATION	
Date	03.16.12
Project No.	11.122.00
Scale	1"=20'
Drawn By	SSJ
Checked By	CCS
State Project No.	H27-6088-MJ
URS/BPBarber Project#	46422193

TITLE
SITE LAYOUT PLAN

DWG. NO. 35,870-B89
SHEET NO.
C-3

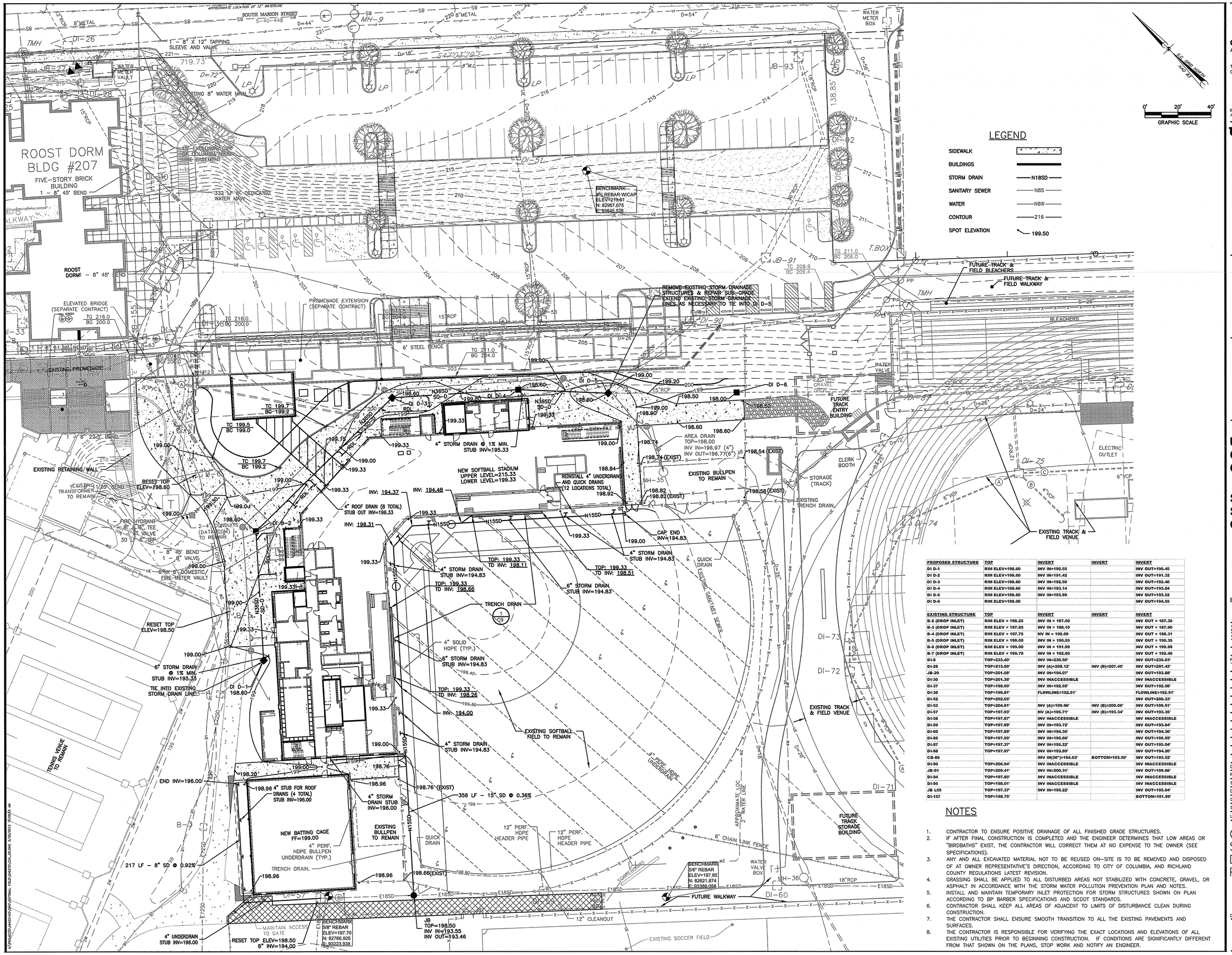

LEGEND

SIDEWALK	
BUILDINGS	
STORM DRAIN	N18SD
SANITARY SEWER	N8S
WATER	N6W
CONTOUR	216
SPOT ELEVATION	199.50

PROPOSED STRUCTURE	TOP	INVERT	INVERT	INVERT
DI D-1	RIM ELEV=198.60	INV IN=190.55		INV OUT=190.45
DI D-2	RIM ELEV=198.60	INV IN=191.42		INV OUT=191.32
DI D-3	RIM ELEV=198.60	INV IN=192.50		INV OUT=192.40
DI D-4	RIM ELEV=198.60	INV IN=193.14		INV OUT=193.04
DI D-5	RIM ELEV=198.60	INV IN=193.99		INV OUT=193.52
DI D-6	RIM ELEV=198.00			INV OUT=194.55
EXISTING STRUCTURE	**TOP**	**INVERT**	**INVERT**	**INVERT**
B-2 (DROP INLET)	RIM ELEV = 198.25	INV IN = 187.50		INV OUT = 187.30
B-3 (DROP INLET)	RIM ELEV = 197.85	INV IN = 188.10		INV OUT = 187.90
B-4 (DROP INLET)	RIM ELEV = 197.75	NV IN = 190.09		INV OUT = 188.31
B-5 (DROP INLET)	RIM ELEV = 198.00	INV IN = 190.55		INV OUT = 190.35
B-6 (DROP INLET)	RIM ELEV = 199.00	INV IN = 191.99		INV OUT = 190.98
B-7 (DROP INLET)	RIM ELEV = 199.79	INV IN = 192.90		INV OUT = 192.40
DI-8	TOP=233.40'	INV IN=230.50'		INV OUT=230.03'
DI-28	TOP=213.00'	INV (A)=208.12'	INV (B)=207.45'	INV OUT=207.43'
JB-29	TOP=201.08'	INV IN=194.07'		INV OUT=193.88'
DI-30	TOP=201.38'	INV INACCESSIBLE		INV INACCESSIBLE
DI-37	TOP=199.90'	INV IN=192.59'		INV OUT=192.56'
DI-38	TOP=199.81'	FLOWLINE=192.91'		FLOWLINE=192.91'
DI-52	TOP=202.65'			INV OUT=200.33'
DI-53	TOP=204.81'	INV (A)=199.96'	INV (B)=200.06'	INV OUT=199.91'
DI-57	TOP=197.93'	NV (A)=195.71'	INV (B)=193.34'	INV OUT=193.35'
DI-58	TOP=197.87'	INV INACCESSIBLE		INV INACCESSIBLE
DI-59	TOP=197.99'	INV IN=193.72'		INV OUT=193.64'
DI-60	TOP=197.89'	INV IN=194.36'		INV OUT=194.36'
DI-86	TOP=197.50'	INV IN=195.66'		INV OUT=195.59'
DI-87	TOP=197.37'	INV IN=195.22'		INV OUT=195.04'
DI-88	TOP=197.97'	INV IN=193.99'		INV OUT=194.20'
CB-89		INV IN(36")=194.03'	BOTTOM=193.50'	INV OUT=193.52'
DI-90	TOP=206.94'	INV INACCESSIBLE		INV INACCESSIBLE
JB-91	TOP=209.41'	INV IN=200.31'		INV OUT=199.86'
DI-94	TOP=197.85'	INV INACCESSIBLE		INV INACCESSIBLE
DI-95	TOP=198.01'	INV INACCESSIBLE		INV INACCESSIBLE
JB L55	TOP=197.37'	INV IN=195.22'		INV OUT=195.04'
DI-157	TOP=198.75'			BOTTOM=191.96'

NOTES

1. CONTRACTOR TO ENSURE POSITIVE DRAINAGE OF ALL FINISHED GRADE STRUCTURES.
2. IF AFTER FINAL CONSTRUCTION IS COMPLETED AND THE ENGINEER DETERMINES THAT LOW AREAS OR "BIRDBATHS" EXIST, THE CONTRACTOR WILL CORRECT THEM AT NO EXPENSE TO THE OWNER (SEE SPECIFICATIONS).
3. ANY AND ALL EXCAVATED MATERIAL NOT TO BE REUSED ON–SITE IS TO BE REMOVED AND DISPOSED OF AT OWNER REPRESENTATIVE'S DIRECTION, ACCORDING TO CITY OF COLUMBIA, AND RICHLAND COUNTY REGULATIONS LATEST REVISION.
4. GRASSING SHALL BE APPLIED TO ALL DISTURBED AREAS NOT STABILIZED WITH CONCRETE, GRAVEL, OR ASPHALT IN ACCORDANCE WITH THE STORM WATER POLLUTION PREVENTION PLAN AND NOTES.
5. INSTALL AND MAINTAIN TEMPORARY INLET PROTECTION FOR STORM STRUCTURES SHOWN ON PLAN ACCORDING TO BP BARBER SPECIFICATIONS AND SCDOT STANDARDS.
6. CONTRACTOR SHALL KEEP ALL AREAS OF ADJACENT TO LIMITS OF DISTURBANCE CLEAN DURING CONSTRUCTION.
7. THE CONTRACTOR SHALL ENSURE SMOOTH TRANSITION TO ALL THE EXISTING PAVEMENTS AND SURFACES.
8. THE CONTRACTOR IS RESPONSIBLE FOR VERIFYING THE EXACT LOCATIONS AND ELEVATIONS OF ALL EXISTING UTILITIES PRIOR TO BEGINNING CONSTRUCTION. IF CONDITIONS ARE SIGNIFICANTLY DIFFERENT FROM THAT SHOWN ON THE PLANS, STOP WORK AND NOTIFY AN ENGINEER.

QUACKENBUSH
ARCHITECTS+PLANNERS
1217 Hampton Street T: 803.771.2999
Columbia, SC 29201 F: 803.771.2858

CHA
III Winners Circle T: 518.453.4500
Albany, NY 12205 F: 518.458.1735

URS | BP Barber
101 RESEARCH DRIVE
COLUMBIA, SC
29203-9589
803-254-4400

CORPORATE SEAL

SOUTH CAROLINA BP BARBER & ASSOCIATES, INC. No. C000020 CERTIFICATE OF AUTHORIZATION

3-30-12
DATE

A/E SEAL

SOUTH CAROLINA PROFESSIONAL ENGINEER No. 23633 CHARLES SMITH

SIGNATURE

PROJECT TITLE

UNIVERSITY OF SOUTH CAROLINA

SOFTBALL STADIUM CONSTRUCTION

BID SET

Conditions of Use: This drawing and the design thereon are the property of Quackenbush Architects + Planners. The reproduction, copying, or use of this drawing without the written consent of Quackenbush Architects + Planners is prohibited and any infringement will be subject to legal action.

REVISIONS

NO	REVISION	DATE

SHEET INFORMATION	
Date	03.16.12
Project No.	11.122.00
Scale	1"=20'
Drawn By	SSJ
Checked By	CCS
State Project No.	H27-6068-MJ
URS/BPBarber Project#	46422193

TITLE

GRADING & STORM DRAINAGE PLAN

DWG. NO. 35,870-B89

SHEET NO.

C-4

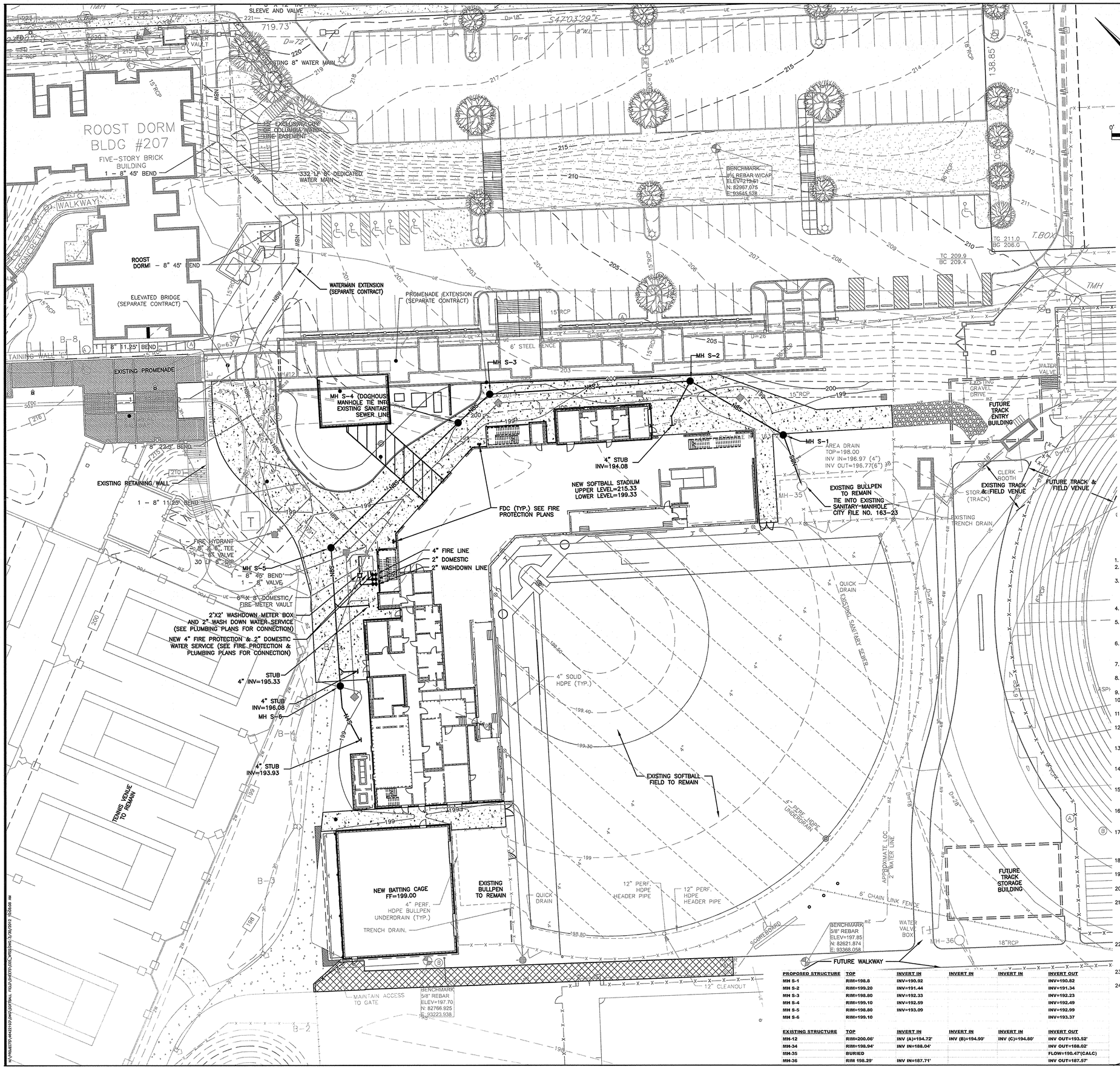

LEGEND

SIDEWALK	
BUILDINGS	
STORM DRAIN	N18SD
SANITARY SEWER	N8S
WATER	N6W
CONTOUR	216
EXISTING MH	
PROPOSED MH	
PROPOSED FH	
PROPOSED GV	

ENGINEER OF RECORD:

NAME: CHRISTOPHER C. SMITH, P.E.
ADDRESS: 101 RESEARCH DRIVE
COLUMBIA, SC 29202
PHONE: (803) 254-4400
FAX: (803) 771-6676

PROPERTY OWNER/DEVELOPER:

NAME: UNIVERSITY OF SOUTH CAROLINA
APPLICANT: MRS. ANN DERRICK
ADDRESS: 743 GREENE STREET
COLUMBIA, SC 29208

NOTES:

1. ALL ELEVATIONS ARE BASED ON MEAN SEA LEVEL DATUM.
2. ALL FIRE HYDRANTS SHALL BE 3 TO 6 FEET FROM THE EDGE OF PAVEMENT. LARGE HUB SHALL FACE TOWARD PAVEMENT.
3. THE CONTRACTOR IS RESPONSIBLE FOR VERIFYING THE EXACT LOCATIONS AND ELEVATIONS OF ALL EXISTING UTILITIES PRIOR TO BEGINNING CONSTRUCTION. IF CONDITIONS ARE SIGNIFICANTLY DIFFERENT FROM THAT SHOWN ON THE PLANS, STOP WORK AND NOTIFY AN ENGINEER.
4. CONTRACTOR SHALL FIELD ADJUST MANHOLE RIMS, CLEANOUTS, FIRE HYDRANTS, VALVES AND APPURTENANCES TO MATCH FINISHED GROUND ELEVATION.
5. CONTRACTOR SHALL INSTALL WATER AND SEWER SERVICES TO THE RIGHT-OF-WAY LINE OR THE EDGE OF EASEMENT, AS SHOWN. ALL SEWER SERVICES ARE TO BE LOCATED 6"-12" INSIDE THE RIGHT-OF-WAY, OR EASEMENT.
6. ALL WATER AND SEWER LINES MUST HAVE 10 FEET HORIZONTAL SEPARATION, 18 INCHES VERTICAL SEPARATION AND ONE PIPE LENGTH MUST BE CENTERED UNDER THE WATER MAIN FOR A SEWER CROSSING
7. ALL WATER, SEWER AND FORCE MAIN LINES SHALL HAVE A MINIMUM 36 INCHES OF COVER UNLESS OTHERWISE NOTED.
8. DUCTILE IRON WATER MAIN SHALL BE INSTALLED WHERE STATIC PRESSURES EXCEEDING 75 PSI
9. DEFLECTION OF WATER MAIN NOT TO EXCEED PIPE MANUFACTURER'S CRITERIA.
10. ALL SEWER SERVICES SHALL BE SIX (6) INCHES IN DIAMETER WITH A CLEANOUT AT THE PROPERTY LINE OR EASEMENT LINE.
11. ALL GRADING OF AREAS WHERE WATER AND SEWER MAIN LINES WILL BE INSTALLED MUST BE COMPLETED PRIOR TO INSTALLATION OF THE PIPE.
12. THE CITY OF COLUMBIA COORDINATED BY THE CONTRACTOR IS RESPONSIBLE FOR PRESSURE TESTING THE NEW WATER MAINS PER S.C.D.H.E.C. AND CITY OF COLUMBIA REGULATIONS AND SPECIFICATIONS, LATEST REVISION.
13. CONTRACTOR IS RESPONSIBLE FOR PRESSURE TESTING THE NEW SEWER MAINS PER S.C.D.H.E.C., AND CITY OF COLUMBIA REGULATIONS AND SPECIFICATIONS, LATEST REVISION.
14. ALL WATER LINE WORK AND MATERIALS MUST CONFORM TO THE CITY OF COLUMBIA REGULATIONS AND SPECIFICATIONS, LATEST REVISION, AT THE BEGINNING OF CONSTRUCTION.
15. ALL SEWER WORK AND MATERIALS MUST CONFORM TO THE CITY OF COLUMBIA REGULATIONS AND SPECIFICATIONS, LATEST REVISION, AT THE BEGINNING OF CONSTRUCTION.
16. CONTRACTOR TO PROVIDE THE CITY ENGINEER (TELEPHONE #:803-545-3400) WITH A MINIMUM OF FORTY-EIGHT (48) HOURS NOTICE PRIOR TO PERFORMING ANY WORK ON THE PROJECT.
17. CONTRACTOR TO HOLD AN ON-SITE PRE-CONSTRUCTION CONFERENCE WITH THE CITY INSPECTOR PRIOR TO PERFORMING ANY WORK ON THE PROJECT. CONTACT JEFF JEFFERS AT (803)545-3400 (THE CITY OF COLUMBIA). FOR APPROVAL PRIOR TO CONSTRUCTION.
18. ALL SEWER MATERIALS AND EQUIPMENT SPECIFICATIONS MUST BE SUBMITTED TO THE ENGINEER FOR APPROVAL PRIOR TO CONSTRUCTION.
19. CONTRACTOR SHALL NOTIFY ENGINEER IMMEDIATELY IF CONDITIONS VARY FROM INFORMATION SHOWN ON PLANS.
20. ALL HYDRANTS TO BE INSTALLED 40' MINIMUM AWAY FROM BUILDINGS PER N.F.P.A. REGULATIONS.
21. ANY WATER MAIN THAT RECEIVES MORE THAN THREE FEET OF ADDITIONAL FILL (COVER) FOR THE ENTIRE WIDTH OF THE WATER EASEMENT SHALL BE RAISED TO MAINTAIN A MINIMUM THREE FEET OF COVER. WATER MAINS THAT RECEIVE BETWEEN ZERO AND THREE FEET OF ADDITIONAL COVER FOR THE ENTIRE WIDTH OF THE WATER EASEMENT WILL NOT BE REQUIRED TO BE RAISED BUT APPURTENANCES SUCH AS VALVE EXTENSIONS SHALL BE RAISED TO MEET NEW GRADE.
22. PROPOSED SEWER CONSTRUCTION IS THE REROUTE OF EXISTING PRIVATE SEWER SERVING A SINGLE CUSTOMER AND DOES NOT PASS A POTENTIAL CUSTOMER BETWEEN THE CONNECTION AND THE CUSTOMER TO BE SERVED, WHICH SERVES AND IS OWNED PRIVATELY MAINTAINED BY THE UNIVERSITY OF SOUTH CAROLINA.
23. SEE PLUMBING PLANS FOR BACKFLOW PREVENTOR LOCATIONS. BACKFLOW PREVENTORS WILL BE LOCATED INSIDE THE BUILDING.
24. GREASE TRAP TO BE LOCATED INSIDE THE STADIUM FOOTPRINT, MODEL #GT2700-100, TRIPLE SINK WILL BE ELKAY STURDIBILT MODEL #SSB354LR. EACH COMPARTMENT IS 18"W X 24"L X 14"D.

PROPOSED STRUCTURE	TOP	INVERT IN	INVERT IN	INVERT IN	INVERT OUT
MH S-1	RIM=198.8	INV=190.92			INV=190.82
MH S-2	RIM=199.20	INV=191.44			INV=191.34
MH S-3	RIM=198.80	INV=192.33			INV=192.23
MH S-4	RIM=199.10	INV=192.59			INV=192.49
MH S-5	RIM=198.80	INV=193.09			INV=192.99
MH S-6	RIM=199.10				INV=193.37

EXISTING STRUCTURE	TOP	INVERT IN	INVERT IN	INVERT IN	INVERT OUT
MH-12	RIM=200.06'	INV (A)=194.72'	INV (B)=194.90'	INV (C)=194.60'	INV OUT=193.52'
MH-34	RIM=198.94'	INV IN=188.04'			INV OUT=188.02'
MH-35	BURIED				FLOW=190.47'(CALC)
MH-36	RIM 198.29'	INV IN=187.71'			INV OUT=187.57'

WATER CONSTRUCTION SEQUENCE

1. ISOLATE THE WATER VALVE SECTIONS TO BE DEMOLISHED USING ON-SITE VALVES.
2. CONSTRUCT NEW WATERLINES AND HYDRANTS IN ACCORDANCE WITH THE WATER CONSTRUCTION PLANS.
3. CONTRACTOR TO COORDINATE WITH THE CITY OF COLUMBIA TO PERFORM TESTING AND STERILIZATION AS APPROPRIATE.
4. DELIVER RECORD DRAWINGS TO CIVIL ENGINEER OF RECORD.

SEE THE CONTRACT

QUACKENBUSH ARCHITECTS+PLANNERS
1217 Hampton Street T: 803.771.2999
Columbia, SC 29201 F: 803.771.2858

CHA
III Winners Circle T: 518.453.4500
Albany, NY 12205 F: 518.458.1735

URS | BP Barber
101 RESEARCH DRIVE
COLUMBIA, SC
29203-9589
803-254-4400

CORPORATE SEAL

SOUTH CAROLINA B.P. BARBER & ASSOCIATES, INC. No. C00020 CERTIFICATE OF AUTHORIZATION

3-30-12
DATE

A/E SEAL

SOUTH CAROLINA PROFESSIONAL ENGINEER No. 23633 CHRISTOPHER CHARLES SMITH

SIGNATURE

PROJECT TITLE

UNIVERSITY OF SOUTH CAROLINA

SOFTBALL STADIUM CONSTRUCTION

BID SET

Conditions of Use: This drawing and the design thereon are the property of Quackenbush Architects + Planners. The reproduction, copying, or use of this drawing without the written consent of Quackenbush Architects + Planners is prohibited and any infringement will be subject to legal action.

REVISIONS

NO	REVISION	DATE

SHEET INFORMATION

Date	03.16.12
Project No.	11.122.00
Scale	1"=20'
Drawn By	SSJ
Checked By	CCS
State Project No.	H27-6088-MJ
URS/BPBarber Project#	46422193

TITLE

WATER DISTRIBUTION & SANITARY SEWER PLAN

DWG. NO. 35,870-B89

SHEET NO.

C-5

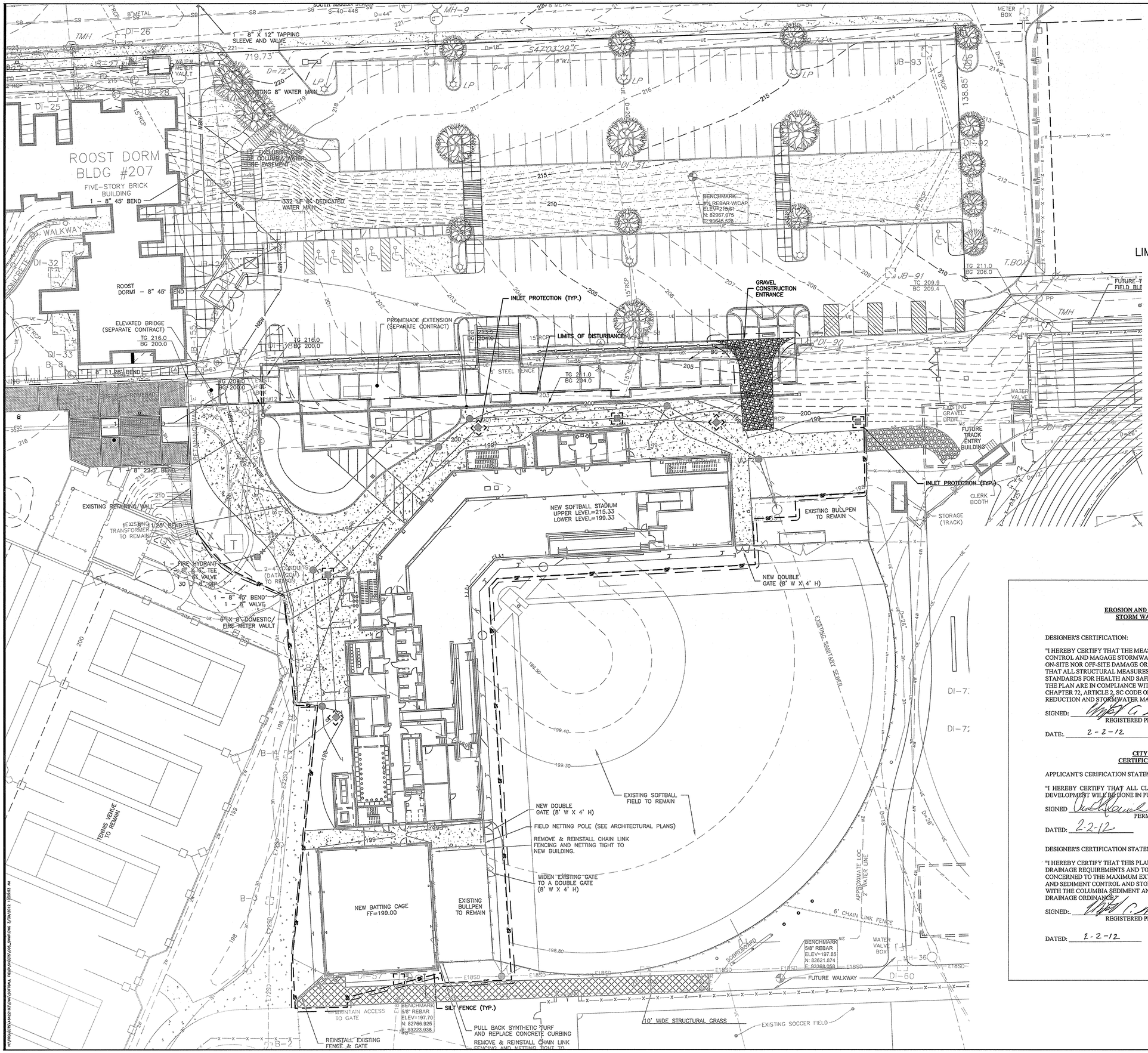

LEGEND

SIDEWALK	
BUILDINGS	
STORM DRAIN	N18SD
SANITARY SEWER	N8S
WATER	N6W
CONTOUR	216
SPOT ELEVATION	199.50

0' 20' 40'
GRAPHIC SCALE

LIMITS OF DISTURBANCE: 1.4 ACRES.

EROSION AND SEDIMENT REDUCTION/ STORM WATER MANAGEMENT

DESIGNER'S CERTIFICATION:

"I HEREBY CERTIFY THAT THE MEASURES IN THIS PLAN ARE DESIGNED TO CONTROL AND MAGAGE STORMWATER IN A MANNER THAT NEITHER ANY ON-SITE NOR OFF-SITE DAMAGE OR PROBLEM IS CAUSED OR INCREASED, THAT ALL STRUCTURAL MEASURES ARE DESIGNED TO THE MINIMUM STANDARDS FOR HEALTH AND SAFETY, AND THAT ALL THE PROVISIONS OF THE PLAN ARE IN COMPLIANCE WITH THE REGULATION CONTAINED IN CHAPTER 72, ARTICLE 2, SC CODE OF REGULATIONS (EROSION AND SEDIMENT REDUCTION AND STORMWATER MANAGEMENT REGULATIONS)."

SIGNED: _____ REGISTERED PROFESSIONAL ENGINEER

DATE:. 2-2-12

CITY OF COLUMBIA CERTIFICATION STATEMENT

APPLICANT'S CERIFICATION STATEMENT:

"I HEREBY CERTIFY THAT ALL CLEARING, GRADING, CONSTRUCTION AND/OR DEVELOPMENT WILL BE DONE IN PURSUANT TO THIS PLAN."

SIGNED _____ PERMIT APPLICANT

DATED: 2-2-12

DESIGNER'S CERTIFICATION STATEMENT:

"I HEREBY CERTIFY THAT THIS PLAN IS DESIGNED TO MEET STORM DRAINAGE REQUIREMENTS AND TO CONTAIN SILT ON THE PROPERTY CONCERNED TO THE MAXIMUM EXTENT FEASIBLE. PROVISIONS FOR EROSION/ AND SEDIMENT CONTROL AND STORM DRAINAGE ARE IN ACCORDANCE WITH THE COLUMBIA SEDIMENT AND EROSION CONTROL AND STORM DRAINAGE ORDINANCE."

SIGNED:. _____ REGISTERED PROFESSIONAL ENGINEER

DATED: 2-2-12

QUACKENBUSH ARCHITECTS + PLANNERS
1217 Hampton Street T: 803.771.2999
Columbia, SC 29201 F: 803.771.2858

CHA
III Winners Circle T: 518.453.4500
Albany, NY 12205 F: 518.458.1735

URS | BP Barber
101 RESEARCH DRIVE
COLUMBIA, SC
29203-9589
803-254-4400

CORPORATE SEAL

SOUTH CAROLINA B.P. BARBER & ASSOCIATES, INC. No. C00020 CERTIFICATE OF AUTHORIZATION

5-30-12
DATE

A/E SEAL

SOUTH CAROLINA REGISTERED PROFESSIONAL ENGINEER No. 23633 CHRISTOPHER CHARLES SMITH

SIGNATURE

PROJECT TITLE

UNIVERSITY OF SOUTH CAROLINA

SOFTBALL STADIUM CONSTRUCTION

BID SET

Conditions of Use: This drawing and the design thereon are the property of Quackenbush Architects + Planners. The reproduction, copying, or use of this drawing without the written consent of Quackenbush Architects + Planners is prohibited and any infringement will be subject to legal action.

REVISIONS

NO	REVISION	DATE

SHEET INFORMATION	
Date	03.16.12
Project No.	11.122.00
Scale	1"=20'
Drawn By	SSJ
Checked By	CCS
State Project No.	H27-6088-MJ
URS/BPBarber Project#	46422193

TITLE

STORM WATER POLLUTION PREVENTION PLAN

DWG. NO. 35.870-B89

SHEET NO.

C-6

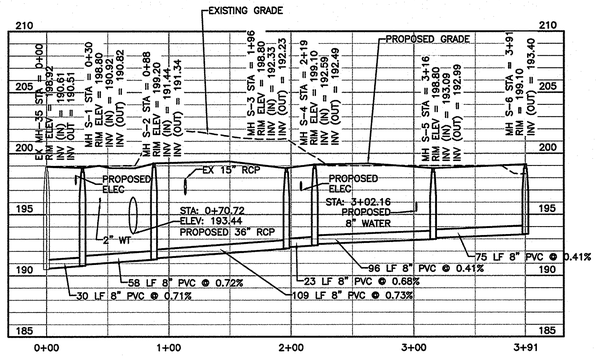

SANITARY SEWER PROFILE LINE S

SCALE: HORIZ. 1" = 50'
VERT. 1" = 5'

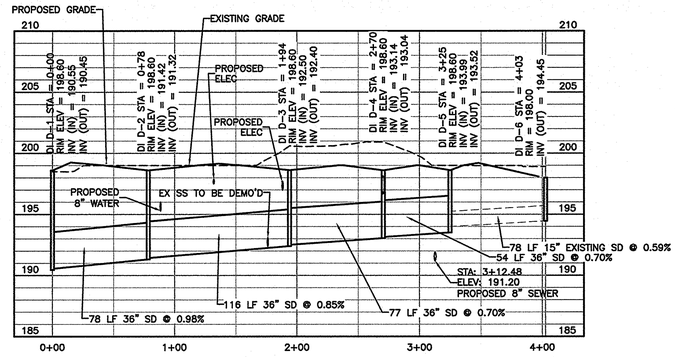

STORM DRAINAGE PROFILE LINE D

SCALE: HORIZ. 1" = 50'
VERT. 1" = 5'

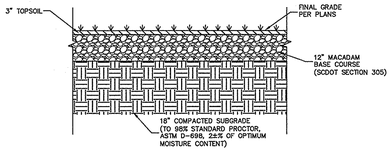

STRUCTURAL GRASS FOR FIRE LANE ACCESS (7 TYP)

NOT TO SCALE

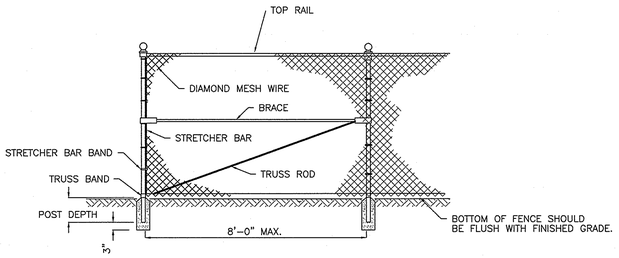

TYPICAL FENCE CORNER (1 TYP)

NOT TO SCALE

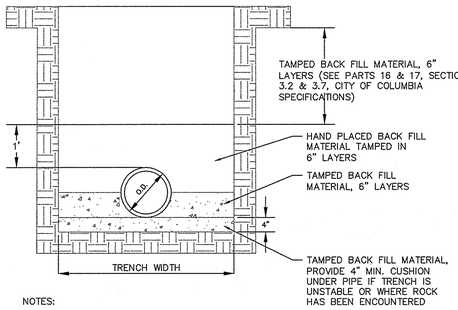

NOTES:

1) THE PIPE IS TO BE BEDDED IN COMPACTED 6" LAYERS TO THE SPRING LINE FIRST, THEN BACK FILLED WITH HAND PLACED MATERIAL COMPACTED IN 6" LAYERS TO A DEPTH OF 1' MIN. ABOVE THE PIPE. SEE SECTIONS 3.2, 3.3, AND 3.7 (PART 17) OF THE CITY OF COLUMBIA SPECIFICATIONS FOR REMAINDER OF THE BACK FILL.
2) BACK FILL MATERIAL SHALL BE COARSE SAND OR GRAVEL (ASTM 2321 CLASS I OR CLASS II)

STANDARD PIPE BEDDING AND BACK FILLING DETAIL FOR PVC/DIP PIPE (4 TYP)

NOT TO SCALE

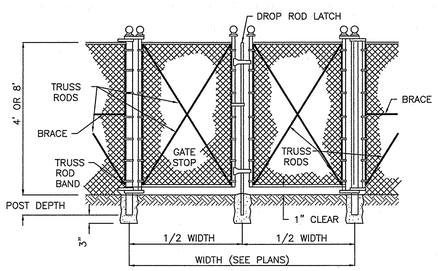

TYPICAL DOUBLE SWING GATE (2 TYP)

NOT TO SCALE

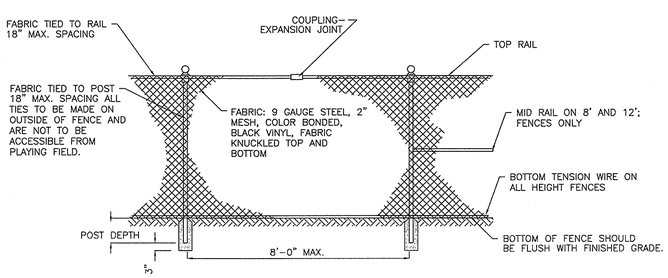

TYPICAL FENCE LINE SPAN (3 TYP)

NOT TO SCALE

FENCING NOTE: REFER TO ARCHITECTURAL PLANS FOR ADDITIONAL FENCING AND DETAILS.

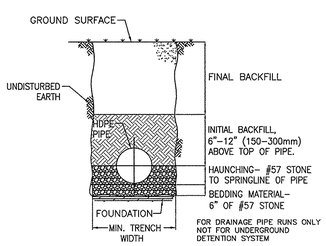

HDPE PIPE BEDDING DETAIL (5 TYP)

NOT TO SCALE

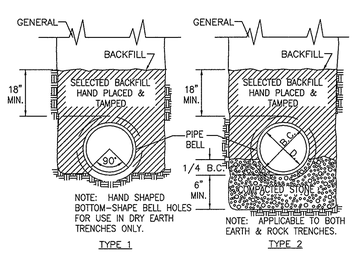

RCP BEDDING DETAIL (6 TYP)

NOT TO SCALE – USE EITHER TYPE

QUACKENBUSH ARCHITECTS+PLANNERS
1217 Hampton Street T: 803.771.2999
Columbia, SC 29201 F: 803.771.2858

CHA
III Winners Circle T: 518.453.4500
Albany, NY 12205 F: 518.458.1735

URS | BP Barber
101 RESEARCH DRIVE
COLUMBIA, SC
29203-9389
803-254-4400

CORPORATE SEAL

SOUTH CAROLINA B.P. BARBER & ASSOCIATES, INC. No. C000020 CERTIFICATE OF AUTHORIZATION

3-30-12
DATE

A/E SEAL

SOUTH CAROLINA REGISTERED PROFESSIONAL ENGINEER No. 23633 CHRISTOPHER CHARLES SMITH

SIGNATURE

PROJECT TITLE

UNIVERSITY OF SOUTH CAROLINA

SOFTBALL STADIUM CONSTRUCTION

BID SET

Conditions of Use: This drawing and the design thereon are the property of Quackenbush Architects + Planners. The reproduction, copying, or use of this drawing without the written consent of Quackenbush Architects + Planners is prohibited and any infringement will be subject to legal action.

REVISIONS

NO	REVISION	DATE

SHEET INFORMATION

Date	03.16.12
Project No.	11.122.00
Scale	1"=20'
Drawn By	SSJ
Checked By	CCS
State Project No.	H27-6088-MJ
URS/BPBarber Project#	46422193

TITLE

PROFILES & DETAILS

DWG. NO. 35,870-B89

SHEET NO.

C-7

N:\PROJECTS\46422193\CAD\Sheet\PLANS, PROFILES\DETAILS.DWG 3/28/2012 3:34:47 PM

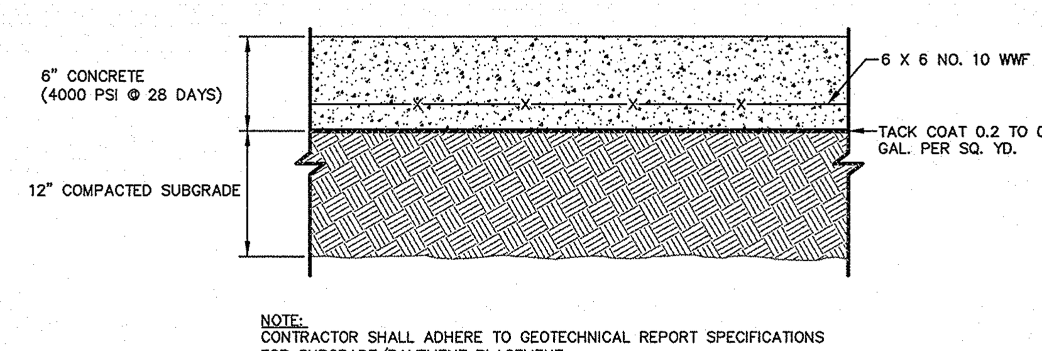

NOTE:
CONTRACTOR SHALL ADHERE TO GEOTECHNICAL REPORT SPECIFICATIONS FOR SUBGRADE/PAVEMENT PLACEMENT.

CONCRETE PAVEMENT (1 TYP)
NOT TO SCALE

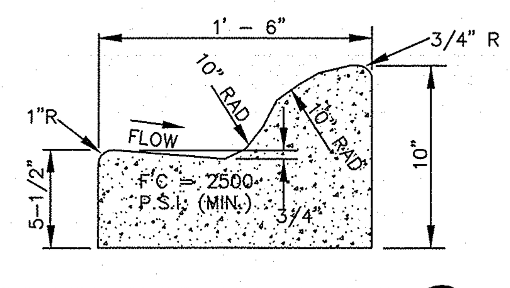

ROLLED CURB AND GUTTER (6 TYP)
NOT TO SCALE

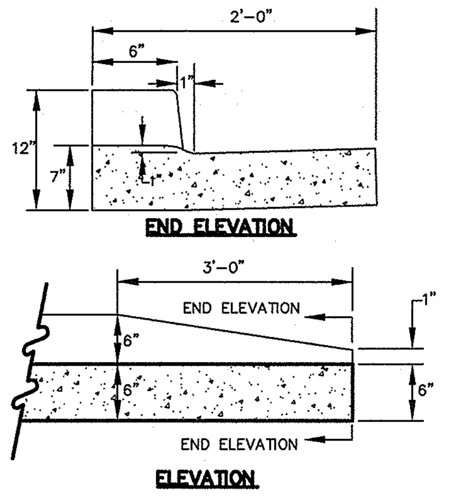

NOTES:
1. USE 3.0' CURB END TAPER AT END OF RADII ON INTERSECTING STREETS AND WHERE CURB IS 6 FEET OR GREATER FROM MAINLINE TRAVEL LANE.
2. USE 10.0' CURB END TAPER AT END OF CURB WHERE CURB IS LESS THAN 6 FEET FROM MAINLINE TRAVEL LANE.

CURB END TAPER DETAIL (7 TYP)
NOT TO SCALE

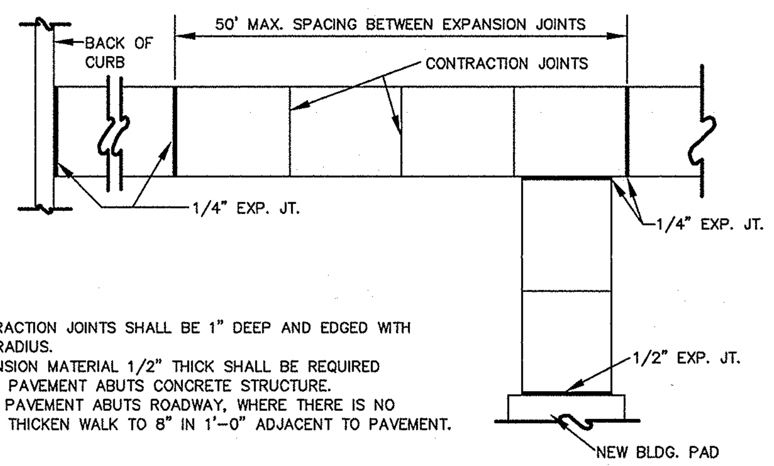

1. CONTRACTION JOINTS SHALL BE 1" DEEP AND EDGED WITH 1/8" RADIUS.
2. EXPANSION MATERIAL 1/2" THICK SHALL BE REQUIRED WHERE PAVEMENT ABUTS CONCRETE STRUCTURE.
3. WHEN PAVEMENT ABUTS ROADWAY, WHERE THERE IS NO CURB, THICKEN WALK TO 8" IN 1'-0" ADJACENT TO PAVEMENT.

STANDARD JOINT LAYOUT FOR CONCRETE PAVEMENTS (2 TYP)
NOT TO SCALE

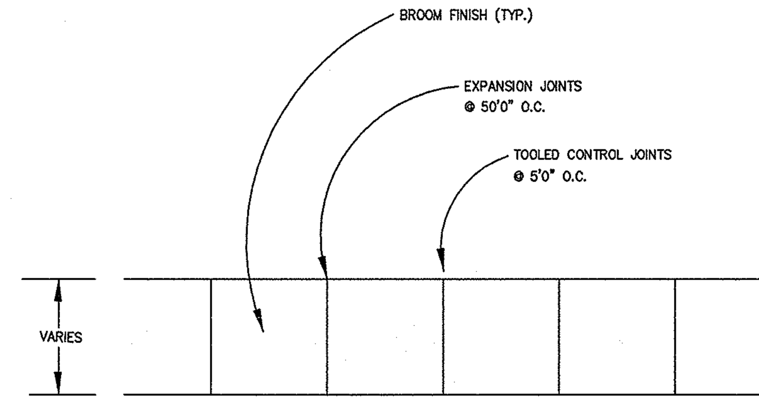

CONCRETE PAVEMENT FINISHING DETAIL (3 TYP)
NOT TO SCALE

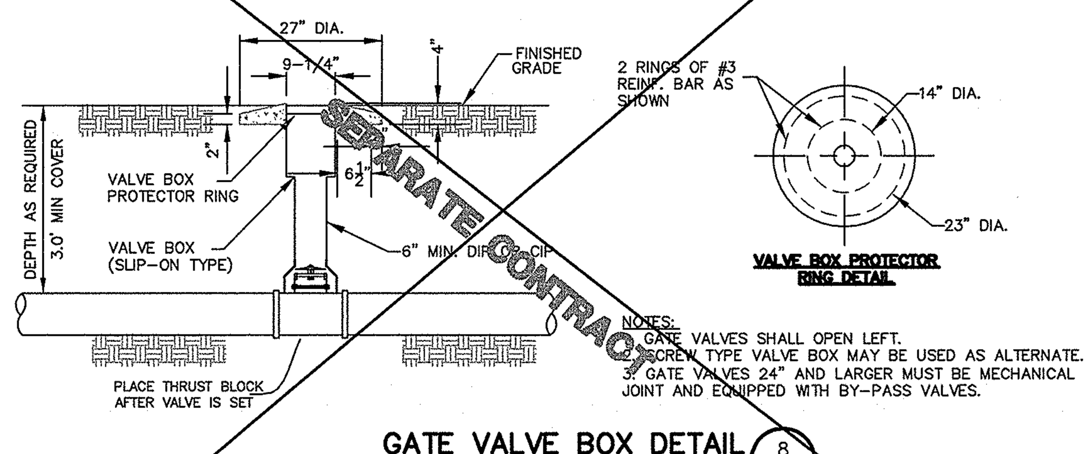

NOTES:
1. GATE VALVES SHALL OPEN LEFT.
2. SCREW TYPE VALVE BOX MAY BE USED AS ALTERNATE.
3. GATE VALVES 24" AND LARGER MUST BE MECHANICAL JOINT AND EQUIPPED WITH BY-PASS VALVES.

GATE VALVE BOX DETAIL (8 TYP)
NOT TO SCALE

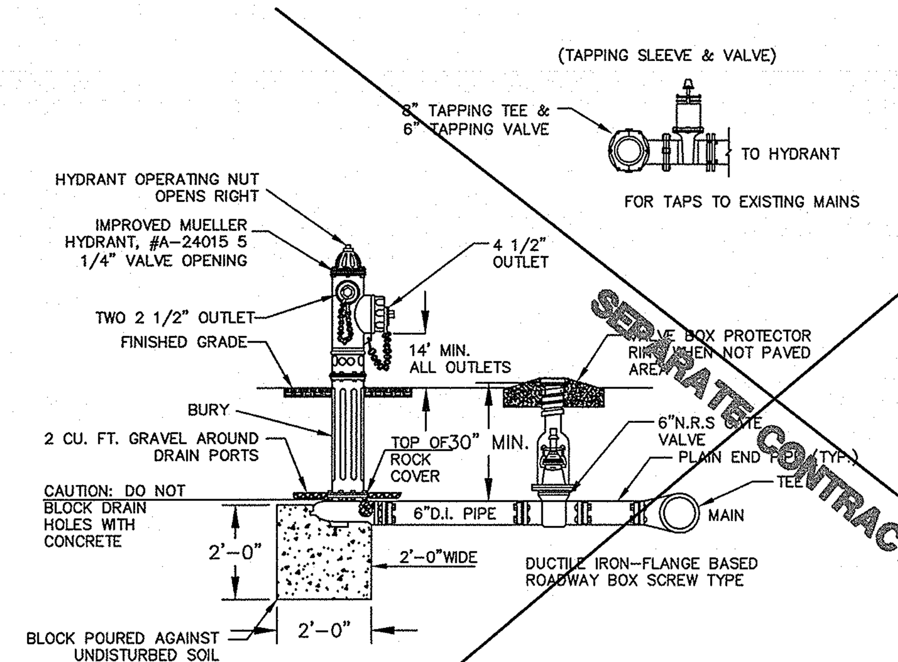

NOTE:
1. ALL JOINTS TO BE MECHANICAL.
2. HYDRANTS SHALL BE NO LESS THAN 3' NOR MORE THAN 6' FROM THE CURB OR THE EDGE OF A HARD SURFACE STREET OR ACCESS ROAD, EXCEPT THAT ALONG RURAL ROADS THROUGH UNDEVELOPED AREAS THE MAXIMUM DISTANCE MAY BE INCREASED TO 10'.
3. HYDRANT MUST BE LOCATED SO AS TO BE UNOBSTRUCTED FOR 15' EITHER SIDE AS MEASURED ALONG THE CURB OR THE EDGE OF A HARD SURFACE STREET OR ACCESS ROAD. THIS AREA MUST BE FREE OF GROWTH AND OTHER OBSTRUCTIONS WHICH WOULD HINDER ACCESS TO THE HYDRANT.
4. MINIMUM DISTANCE BETWEEN VALVE AND HYDRANT SHALL BE 3'.
5. BENDS MAY BE USED IN HYDRANT LEAD TO FACILITATE HYDRANT LOCATION.
6. GATE VALVES TO OPEN TO THE LEFT.

HYDRANT ASSEMBLY DETAIL (10 TYP)
SCALE: 3/8" = 1'-0"

STANDARD MANHOLE
SCHEDULE OF GOVERNING DIMENSIONS

PIPE SIZE	ANGLE Δ	MANHOLE DIAMETER	"R"	"X"
8" TO 15"	0° TO 90°	4'-0"	2'-0"	0"
18" TO 30"	0° TO 90°	5'-0"	2'-0"	6"
36" TO 42"	0° TO 60°	6'-0"	3'-0"	9"
36" TO 42"	60° TO 90°	6'-0	3'-0"	1'-2"
48" OR LARGER	0° TO 45°	7'-0	4'-0"	6"
48" OR LARGER	45° TO 90°	8'-0	3'-0"	1'-3"

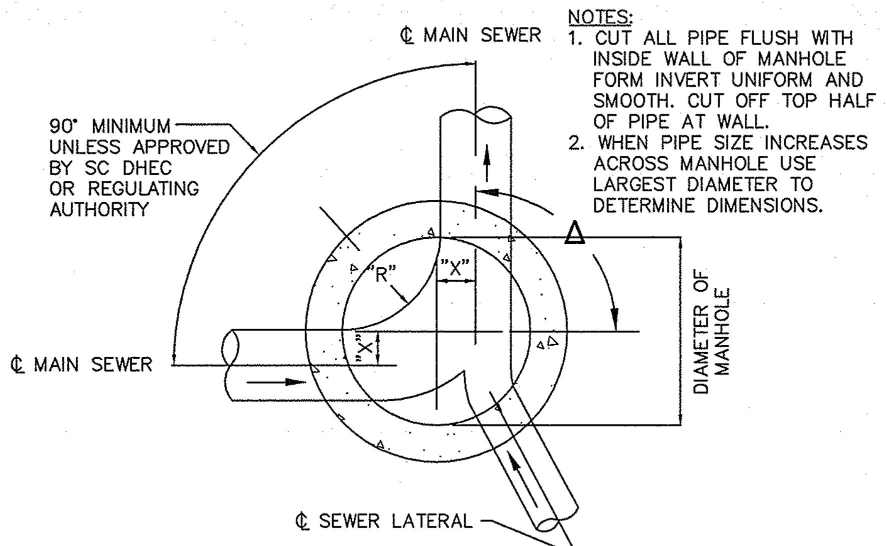

NOTES:
1. CUT ALL PIPE FLUSH WITH INSIDE WALL OF MANHOLE FORM INVERT UNIFORM AND SMOOTH. CUT OFF TOP HALF OF PIPE AT WALL.
2. WHEN PIPE SIZE INCREASES ACROSS MANHOLE USE LARGEST DIAMETER TO DETERMINE DIMENSIONS.

STANDARD MANHOLE (13 TYP)
NOT TO SCALE

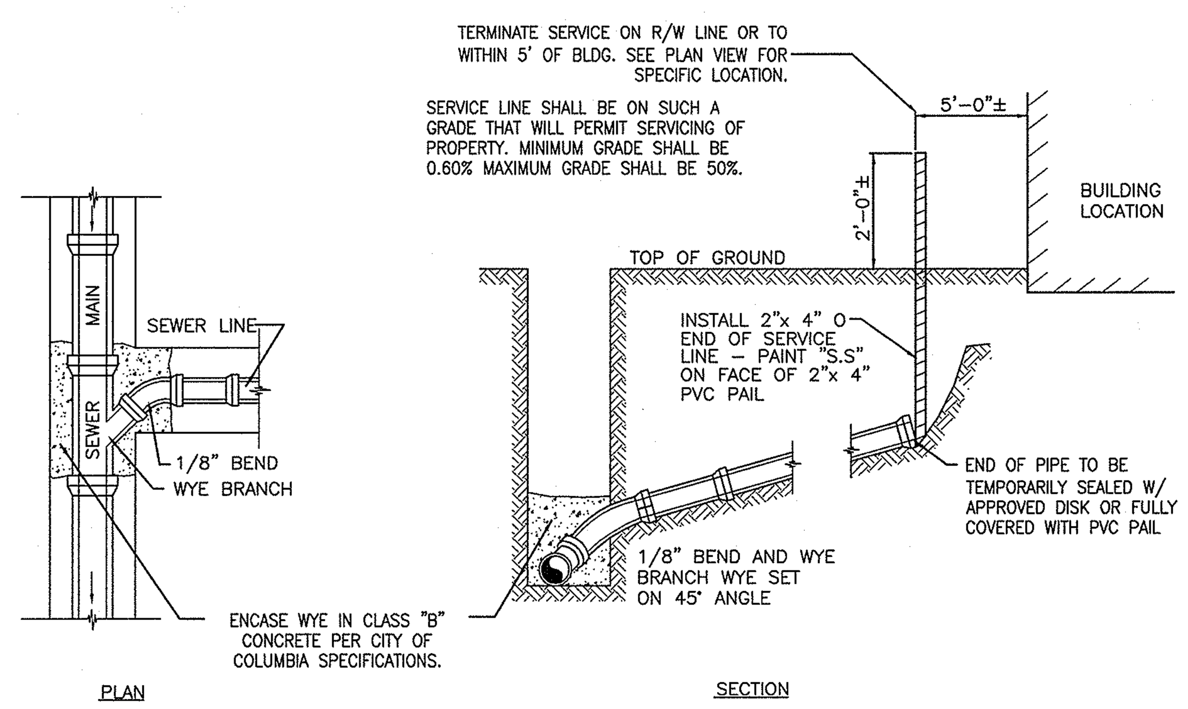

SERVICE CONNECTION DETAIL (11 TYP)
NOT TO SCALE

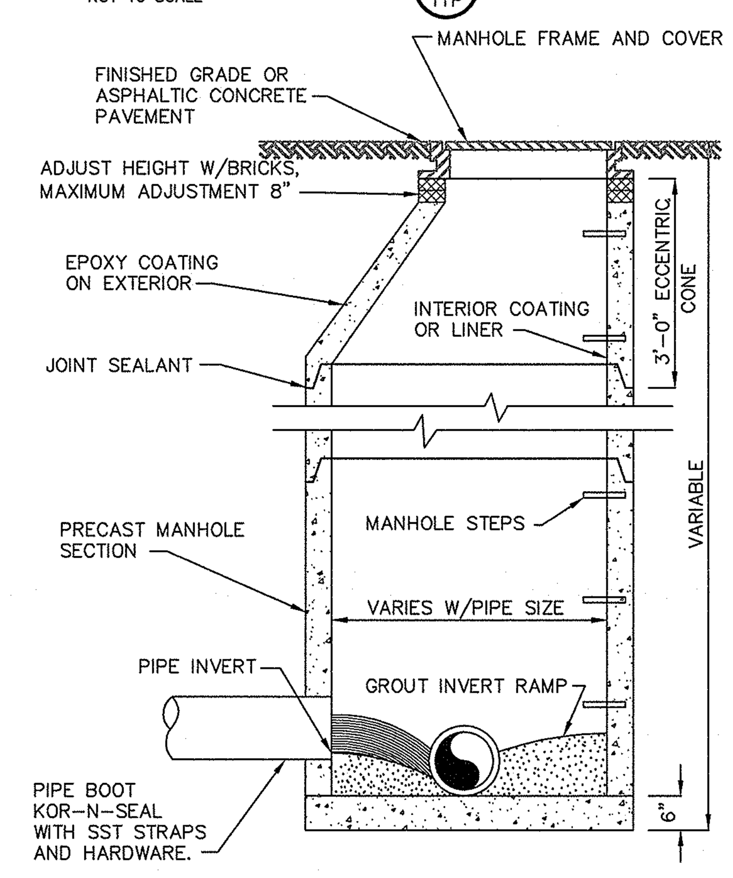

PRECAST MANHOLE (14 TYP)
NOT TO SCALE

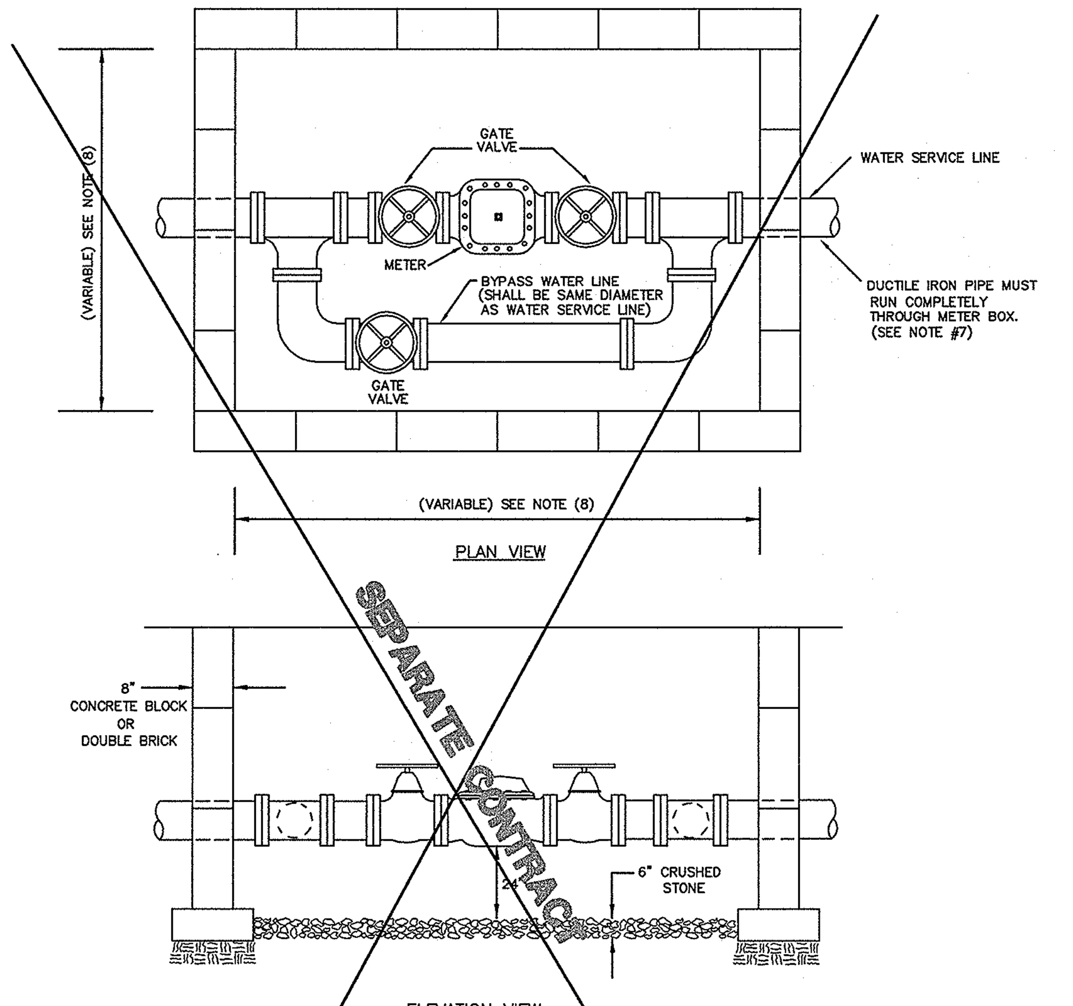

(1) METER BOXES 3" AND ABOVE SHALL BE SITE CONSTRUCTED OF THE MATERIALS AND TO THE DIMENSIONS SPECIFIED HEREIN.
(2) METER BOXES CONSTRUCTED WITHIN THE TRAVELED WAY MUST WITHSTAND HEAVY SUPERIMPOSED LOADS. EACH MUST BE DESIGNED TO MEET THE REQUIREMENTS OF THE INDIVIDUAL ENVIRONMENT IN WHICH IT IS TO BE USED. DETAILS/SHOP DRAWINGS AND DESIGN CALCULATIONS MUST BE SUBMITTED AND APPROVED PRIOR TO INSTALLATION OF THE METER.
(3) METER BOXES SHALL BE PROVIDED WITH A COVER FABRICATED FROM ONE FOURTH (1/4") INCH THICK FLOOR PLATE STEEL WITH A NON-SKID SURFACE PRIMED AND PAINTED TO COVER ENTIRE BOX. COVERS MUST HAVE A HINGED 24"X24" INSPECTION LID IN THE CENTER OF THE COVER WITH LIFT HANDLES FOR MANIPULATING THE LID. COVER HANDLES MUST LAY FLAT AND BELOW SURFACE COVER.
(4) THE BOX COVER SHALL BE FLUSH WITH THE SURROUNDING GROUND SURFACE AND SHALL HAVE 2" GUIDES ALONG ADJACENT SIDES TO PREVENT LATERAL MOVEMENT.
(5) THE BOX SHALL BE CONSTRUCTED OF 8" CONCRETE BLOCK, OR STANDARD BRICK, USING PORTLAND CEMENT MORTAR IN A STANDARD MIXTURE OR PREFORMED CONCRETE.
(6) SIX (6") INCHES OF NO. 5 CRUSHED STONE SHALL BE PLACED IN THE BOTTOM OF EACH BOX. A TWENTY-FOUR (24") INCH CLEARANCE BETWEEN THE TOP OF THE STONE AND THE BOTTOM OF THE METER MUST BE PRESERVED.
(7) DUCTILE IRON PIPE MUST RUN COMPLETELY THROUGH METER BOX.
(8) BACKFLOW PREVENTORS SHALL MEET CITY OF COLUMBIA STANDARDS. CONTRACTOR SHALL SUBMIT SHOP DRAWINGS TO THE ENGINEER FOR APPROVAL PRIOR TO CONSTRUCTION.
(9) ALL METER BOXES SHALL HAVE THE FOLLOWING DIMENSIONS:

INSIDE DIMENSIONS OF BOX

METER SIZE	BOX SIZE	DEPTH
3", 4"& 6"	6' X 8'	AS REQUIRED
8" & 10"	8' X 10'	AS REQUIRED

TYPICAL METER BOX (9 TYP)
NOT TO SCALE

CONCRETE BLOCKING DIMENSIONS					
PIPE SIZE X	A	B (SQ.FT.)	C	MBA*2	*1
(*DENOTES BRANCH SIZE) TEES					
*2"-6"	2'-0"	2'-0"	1'-4"	2.7	0.13
* 8"	2'-0"	2'-6"	1'-10"	4.6	0.2
* 10"	2'-6"	3'-6"	2'-0"	7	0.39
* 12"	2'-6"	4'-6"	2'-3"	10.1	0.54
90 DEGREE BENDS					
*2"-6"	2'-0"	2'-9"	1'-3"	2.4	0.16
* 8"	2'-0"	3'-3"	2'-0"	6.5	0.28
* 10"	2'-6"	4'-0"	2'-6"	10	0.53
* 12"	2'-6"	5'-0"	2'-9"	13[illegible]	0.73
45 DEGREE BENDS					
*2"-6"	2'-0"	2'-0"	1'-0"	2	[illegible]
* 8"	2'-0"	2'-6"	1'-5"	3.5	0.[illegible]
* 10"	2'-6"	3'-6"	1'-6"	5.2	0.29
* 12"	2'-6"	4'-6"	1'-8"	7.5	0.4
22 1/2 DEGREE BENDS					
*2"-6"	2'-0"	1'-0"	1'-0"	1	0.08
* 8"	2'-0"	1'-9"	1'-0"	1.7	0.11
* 10"	2'-6"	2'-3"	1'-3"	2.8	0.19
* 12"	2'-6"	2'-6"	1'-6"	3.7	0.24
11 1/4 DEGREE BENDS					
*2"-6"	2'-0"	1'-0"	0'-6"	0.5	0.06
* 8"	2'-0"	1'-3"	0'-9"	0.9	0.08
* 10"	2'-6"	1'-6"	1'-0"	1.5	0.14
* 12"	2'-6"	2'-0"	1'-0"	2	0.17

*1 – ESTIMATED C.Y. CONC. FOR TEES AND BENDS
*2 – MINIMUM BEARING AREA (MBA) IS BASED ON SOIL BEARING CAPACITY OF 2000 PSF.

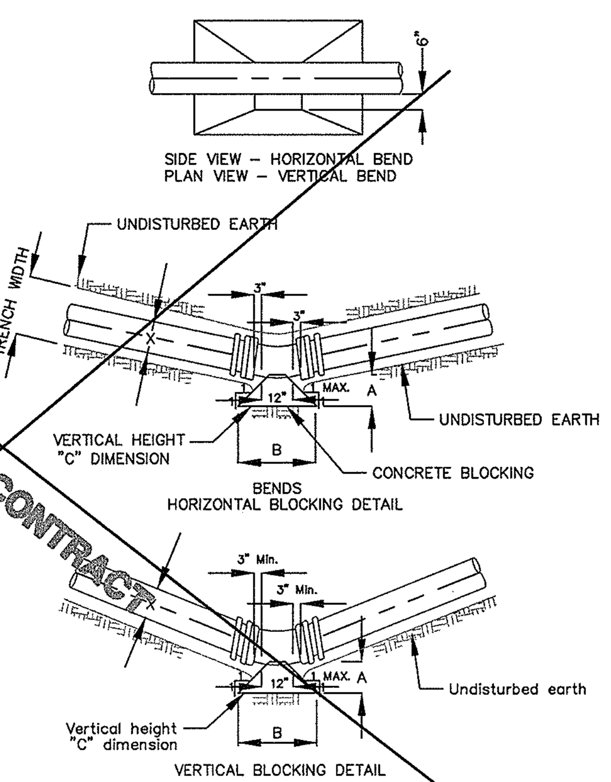

THRUST BLOCK DETAIL (5 TYP)
NOT TO SCALE

CHART "A"

MINIMUM DIMENSIONS			
MH	4'-0"	5'-0"	6'-0"
A	48"	60"	72"
B	58"	72"	86"
C	5"	6"	7"
D	6"	8"	10"

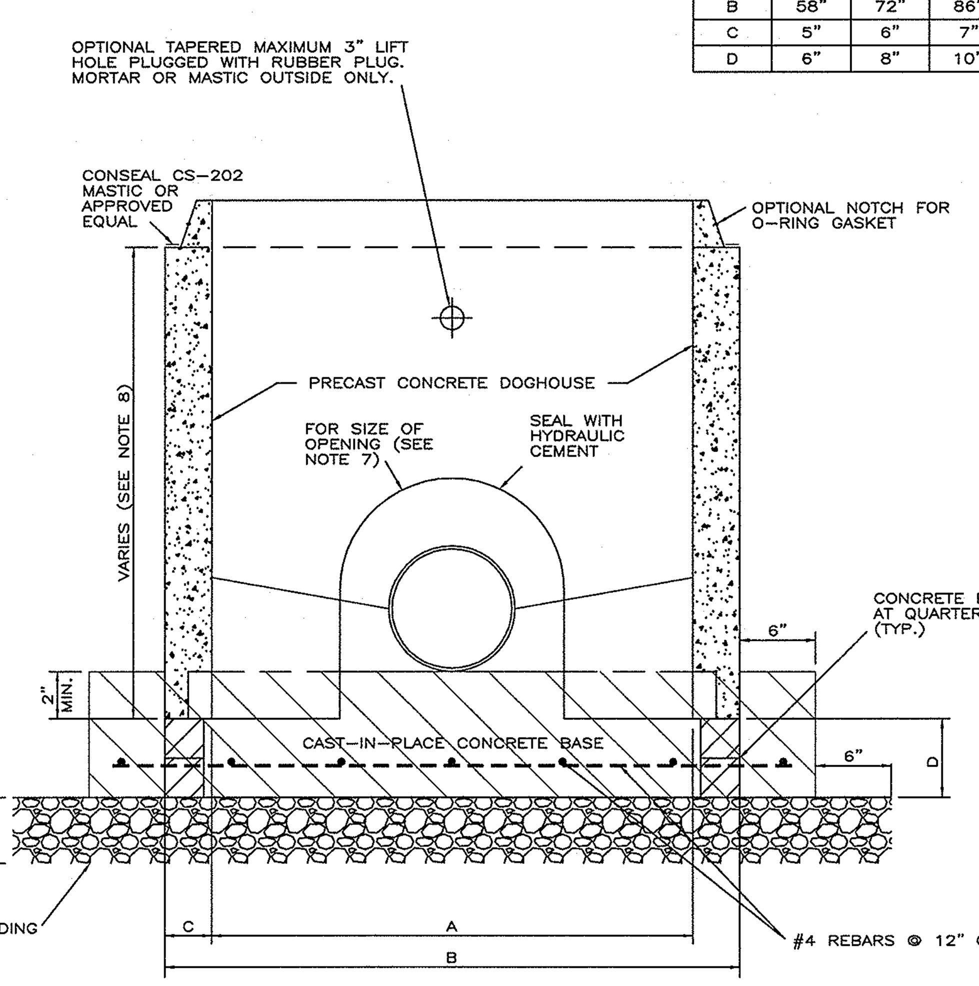

NOTES:
1. CONCRETE TO BE CLASS III.
2. ALL REINFORCING TO MEET REQUIREMENTS OF LATEST ASTM C478 SPECIFICATIONS.
3. MANHOLE SECTIONS TO MEET REQUIREMENTS OF LATEST ASTM C478 SPECIFICATIONS.
4. TAPERED JOINT WITH O-RING GASKET TO MEET LATEST ASTM C361 SPECIFICATIONS.
5. DOGHOUSE OPENING MAY ONLY BE USED WHEN PLACING A NEW MANHOLE OVER AN EXISTING LINE; OTHERWISE, THE OPENING MUST BE CAST. SIZE, LOCATION AND ANGLE OF ENTRY SHALL BE AS REQUIRED BY THE PLANS.
6. JOINT CONFIGURATION MAY BE CAST BELL-UP OR SPIGOT-UP.
7. HOLES IN PRECAST UNITS ARE TO BE 4" MIN. TO 8" MAX. LARGER THAN THE OUTSIDE DIAMETER OF THE PIPE.
8. BASE SECTION TO PROVIDE 6" MIN. CLEARANCE BETWEEN TOP OF PIPE OPENING AND BOTTOM OF BELL AND SPIGOT JOINT.

PRECAST CONCRETE DOGHOUSE MANHOLE (12 TYP)
NOT TO SCALE

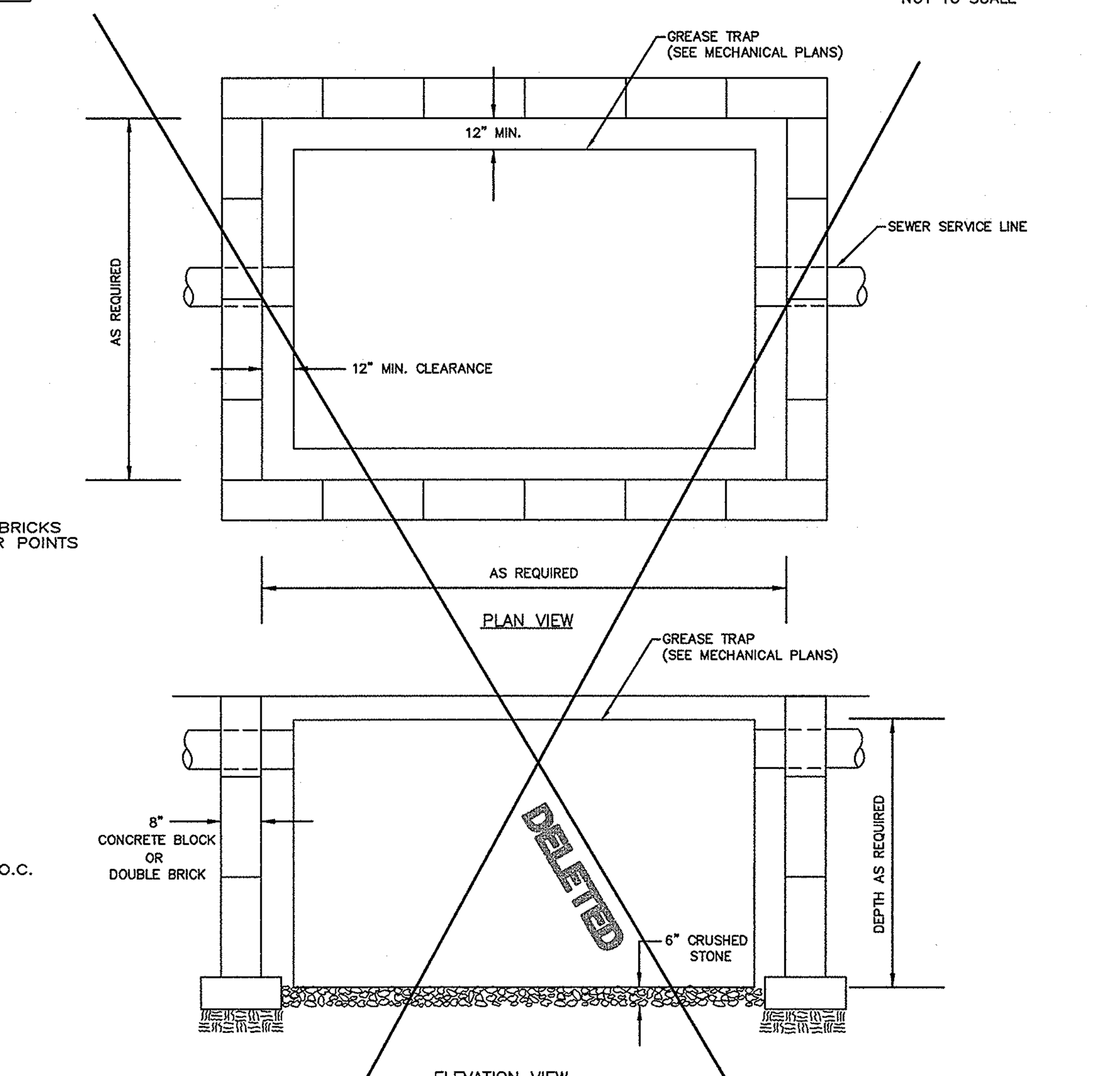

(1) GREASE TRAP VAULTS CONSTRUCTED WITHIN THE TRAVELED WAY MUST WITHSTAND HEAVY SUPERIMPOSED LOADS. EACH MUST BE DESIGNED TO MEET THE REQUIREMENTS OF THE INDIVIDUAL ENVIRONMENT IN WHICH IT IS TO BE USED. DETAILS/SHOP DRAWINGS AND DESIGN CALCULATIONS MUST BE SUBMITTED AND APPROVED PRIOR TO INSTALLATION OF THE METER.
(2) GREASE TRAP VAULTS SHALL BE PROVIDED WITH A COVER FABRICATED FROM ONE FOURTH (1/4") INCH THICK FLOOR PLATE STEEL WITH A NON-SKID SURFACE PRIMED AND PAINTED TO COVER ENTIRE BOX. COVERS MUST HAVE A HINGED 24"X24" INSPECTION LID IN THE CENTER OF THE COVER WITH LIFT HANDLES FOR MANIPULATING THE LID. COVER HANDLES MUST LAY FLAT AND BELOW SURFACE COVER.
(3) GREASE TRAP VAULT COVER SHALL BE FLUSH WITH THE SURROUNDING GROUND SURFACE AND SHALL HAVE 2" GUIDES ALONG ADJACENT SIDES TO PREVENT LATERAL MOVEMENT.
(4) GREASE TRAP VAULT SHALL BE CONSTRUCTED OF 8" CONCRETE BLOCK, OR STANDARD BRICK, USING PORTLAND CEMENT MORTAR IN A STANDARD MIXTURE OR PREFORMED CONCRETE.
(5) SIX (6") INCHES OF NO. 5 CRUSHED STONE SHALL BE PLACED IN THE BOTTOM OF THE VAULT. GREASE TRAP VAULT TO SET ON TOP OF STONE.

GT-2700 GREASE TRAP VAULT (15 TYP)
NOT TO SCALE

QUACKENBUSH ARCHITECTS+PLANNERS
1217 Hampton Street T: 803.771.2999
Columbia, SC 29201 F: 803.771.2858

CHA
III Winners Circle T: 518.453.4500
Albany, NY 12205 F: 518.458.1735

URS | BP Barber
101 RESEARCH DRIVE
COLUMBIA, SC
29203-9389
803-254-4400

CORPORATE SEAL
SOUTH CAROLINA · B.P. BARBER & ASSOCIATES, INC. No. C00020 · CERTIFICATE OF AUTHORIZATION
3-30-12
DATE
A/E SEAL
SOUTH CAROLINA · No. 23633
SIGNATURE

PROJECT TITLE
UNIVERSITY OF SOUTH CAROLINA
SOFTBALL STADIUM CONSTRUCTION

BID SET

Conditions of Use: This drawing and the design thereon are the property of Quackenbush Architects + Planners. The reproduction, copying, or use of this drawing without the written consent of Quackenbush Architects + Planners is prohibited and any infringement will be subject to legal action.

REVISIONS

NO	REVISION	DATE

SHEET INFORMATION

Date	03.16.12
Project No.	11.122.00
Scale	1"=20'
Drawn By	SSJ
Checked By	CCS
State Project No.	H27-6088-MJ
URS/BPBarber Project#	46422193

TITLE
SITE DETAILS

DWG. NO. 35,870-899
SHEET NO.
C-8

N:\PROJECTS\46422193\DWG\SOFTBALL FIELD\SHEETS\C07_DETS.DWG 3/28/2012 5:35:03 PM

SEDIMENT AND EROSION CONTROL NOTES

I. GENERAL NOTES

1. ALL ELEVATIONS ARE BASED ON MEAN SEA LEVEL DATUM.
2. CONTRACTOR SHALL, FOR ALL GRASSED AREAS, BE RESPONSIBLE FOR REPLACING ERODED SOIL AND GRASS SEED UNTIL AN APPROVED STAND OF GRASS IS ESTABLISHED.
3. CONTRACTOR SHALL, BEFORE BEGINNING GRADING WORK ON SITE, STAKE SILT FENCE AND INSTALL ALL PERIMETER CONTROLS AS SHOWN ON THIS PLAN.
4. CONTRACTOR SHALL BE AWARE OF EXISTING UTILITY LINES DURING PIPE LINE INSTALLATION. CONTRACTOR SHALL NOTIFY UTILITY COMPANIES SUCH AS THE LOCAL ELECTRIC COMPANY, BELLSOUTH, ETC. FOR LOCATION OF OTHER UTILITIES NOT SHOWN ON PLAN. CALL PALMETTO UTILITIES (888-721-7877) FOR UNDERGROUND UTILITY LINES LOCATION. THE CONTRACTOR IS RESPONSIBLE FOR LOCATING ALL UNDERGROUND UTILITIES PRIOR TO CONSTRUCTION.
6. PROMPTLY INFORM THE ENGINEER OF ANY ERROR OR DISCREPANCIES DISCOVERED IN THE DRAWINGS OR SPECIFICATIONS OR CONFLICTS BETWEEN THE DRAWING AND SPECIFICATIONS IN ORDER FOR CORRECTIONS TO BE MADE.
7. ALL WORK AND MATERIALS MUST CONFIRM WITH THE RICHLAND COUNTY AND CITY OF COLUMBIA REGULATIONS AND SPECIFICATIONS, LATEST REVISIONS AT THE BEGINNING OF CONSTRUCTION.
8. ALL NEWLY CONSTRUCTED SLOPES WHICH ARE STEEPER THAN 2.5 TO 1 MUST BE STABILIZED BY INSTALLATION OF EROSION CONTROL MATTING. OTHER AREAS SUCH AS CHANNEL BOTTOMS, CHANNEL SIDESLOPES, AND SLOPES NEAR SENSITIVE WETLAND AREAS MAY ALSO REQUIRE EROSION CONTROL MATTING WHERE SHOWN ON PLANS. USE NORTH AMERICAN GREEN S150 OR APPROVED EQUAL. EQUAL PRODUCTS MUST BE APPROVED BY THE ENGINEER PRIOR TO INSTALLATION.
9. PROVIDE A TEMPORARY STONE SPLASH PAD AT ALL FIRE HYDRANTS OR OTHER POINTS OF DISCHARGE DURING TESTING OF THE WATER DISTRIBUTION SYSTEM.
10. PROVIDE SILT FENCE AND/OR OTHER CONTROL DEVICES AS MAY BE REQUIRED TO CONTROL SOIL EROSION DURING OFF SITE UTILITY CONSTRUCTION. ALL DISTURBED AREAS SHALL BE CLEANED, GRADED AND STABILIZED WITH GRASSING IMMEDIATELY AFTER THE UTILITY INSTALLATION.
11. ALL AREAS WHICH ARE DISTURBED BY CONSTRUCTION ACTIVITIES SHALL BE SEEDED AT NO ADDITIONAL EXPENSE TO THE OWNER.
12. SCDHEC TYPE A FILTER FABRIC INLET PROTECTION OR APPROVED EQUAL SHALL BE INSTALLED FOR ALL CATCH BASINS. SCDHEC TYPE E SURFACE COURSE CURB INLET FILTERS SHALL BE INSTALLED FOR ALL YARD INLETS.

II. EROSION CONTROL PLAN

1. INSTALL PERMANENT VEGETATIVE COVER AND THE LONG-TERM EROSION PROTECTION MEASURES OR STRUCTURES AS SOON AS PRACTICAL IN THE DEVELOPMENT PROCESS.
2. PROVIDE FOR HANDLING OF THE INCREASED RUNOFF CAUSED BY CHANGED SOIL AND SURFACE CONDITIONS. USE EFFECTIVE MEANS TO CONSERVE EXISTING ON-SITE SOIL INCLUDING THE USE OF DIVERSION DITCHES, GRASSED WATERWAYS AND STORM SEWERS.
3. PLACE SILT FENCE BARRIERS AT LOCATIONS SHOWN ON THIS SHEET. SILT BARRIERS SHALL BE MAINTAINED IN PLACE AND IN GOOD CONDITION UNTIL GROUND COVER IS ESTABLISHED. SILT FENCE SHALL BE CLEANED OR REPLACED WHEN SILT ACCUMULATION REACHES 1/3 THE HEIGHT OF THE FENCE. SEDIMENT SHALL BE RESPREAD ONSITE.
4. ALL DISTURBED AREAS NOT PAVED SHALL BE GRASSED. USE TEMPORARY PLANT COVER, MULCHING, AND/OR STRUCTURES TO CONTROL RUNOFF AND PROTECT AREA SUBJECT TO EROSION DURING CONSTRUCTION.
5. ALL SEDIMENT AND EROSION CONTROLS ARE TO BE INSPECTED AT LEAST ONCE EVERY SEVEN CALENDAR DAYS AND AFTER ANY STORM EVENT OF GREATER THAN 0.5 INCHES OF PRECIPITATION DURING ANY 24-HOUR PERIOD. MAINTENANCE OF SEDIMENT TRAPPING SHALL BE PERFORMED AS NECESSARY PER THESE INSPECTIONS. DAMAGED OR INEFFECTIVE DEVICES SHALL BE REPAIRED OR REPLACED, AS NECESSARY.
6. ADDITIONAL EROSION CONTROL DEVICES MAY BE REQUIRED DURING CONSTRUCTION TO CONTROL EROSION AND/OR OFF SITE SEDIMENTATION. CONTRACTOR IS RESPONSIBLE FOR MAINTAINING THE STABILITY OF ALL GRADED AND/OR CLEARED AREAS UNTIL PERMANENT GROUND COVER IS ESTABLISHED. ANY AREAS DAMAGED BY EROSION SHALL BE REPAIRED TO ITS ORIGINAL CONDITION AND PROTECTED FROM FURTHER EROSION AT NO ADDITIONAL COST TO THE OWNER.
7. ALL EROSION CONTROL DEVICES SHALL BE PROPERLY MAINTAINED DURING ALL PHASES OF CONSTRUCTION UNTIL THE COMPLETION OF ALL CONSTRUCTION ACTIVITIES AND ALL DISTURBED AREAS HAVE BEEN STABILIZED. ALL TEMPORARY CONTROL DEVICES SHALL BE REMOVED ONCE CONSTRUCTION IS COMPLETED AND THE SITE STABILIZED.

III. SEEDING SCHEDULE

A. MIXTURES OF DIFFERENT TYPES OF SEED FOR THE VARIOUS SCHEDULES SHALL BE WEIGHED AND MIXED IN PROPER PROPORTIONS IN THE PRESENCE OF THE OWNER'S REPRESENTATIVES.

B. SCHEDULE NO. 1 – PLANTING DATES MAY 1 TO AUGUST 31:

COMMON NAME OF SEED	RATE A	RATE B
BROWN TOP MILLET	1.5	1.0
COMMON BERMUDA (HULLED)	3.0	2.0
10-10-10 FERTILIZER	25.0	25.0
AGRICULTURAL LIME	75.0	75.0

C. SCHEDULE NO. 2 – PLANTING DATES SEPTEMBER 1 – APRIL 30:

COMMON NAME OF SEED	RATE A	RATE B
BROWN TOP MILLET	5.0	0.0
ANNUAL RYE GRASS	0.0	2.0
COMMON BERMUDA (HULLED)	0.0	0.5
COMMON BERMUDA (UNHULLED)	0.0	1.5
10-10-10 FERTILIZER	25.0	25.0
AGRICULTURAL LIME	75.0	75.0

D. USE RATE A POUNDS PER 1,000 SQ. FT. ON SLOPES STEEPER THAN FIVE FEET HORIZONTAL TO ONE FOOT VERTICAL IN HEIGHT AND USE RATE B POUNDS PER 1,000 SQ. FT. ON SLOPES FLATTER THAN FIVE FEET HORIZONTAL TO ONE FOOT VERTICAL.

IV. TEMPORARY GRASS

JAN. 1 – APRIL 30

RYE (GRAIN)	120 LBS/ACRE
ANNUAL LESPEDEZA	50 LBS/ACRE
MULCH STRAW	4,000 LBS/ACRE
AGRICULTURAL LIMESTONE	2,000 LBS/ACRE
FERTILIZER 10-10-10	500 LBS/ACRE

MAY 1 – AUG. 15

GERMAN MILLET	40 LBS/ACRE
MULCH STRAW	4,000 LBS/ACRE
AGRICULTURAL LIMESTONE	2,000 LBS/ACRE
FERTILIZER 10-10-10	500 LBS/ACRE

AUG. 16 – DEC. 31

RYE (GRAIN)	120 LBS/ACRE
MULCH STRAW	4,000 LBS/ACRE
AGRICULTURAL LIMESTONE	2,000 LBS/ACRE
FERTILIZER 10-10-10	

V. PERMANENT GRASS

FEBRUARY 1 – MARCH 31, AUGUST 20 – OCTOBER 25 GRASS SHALL BE PROVIDED FOR ALL DISTURBED AREAS. FERTILIZER SHALL BE COMMERCIAL TYPE 10-10-10. LIME SHALL BE AGRICULTURAL GRADE
GROUND LIMESTONE, CONTAINING AT LEAST 34% MAGNESIUM CARBONATE. SEED SHALL BE BERMUDA, MINIMUM 90% PURITY AND 80% GERMINATION. AREAS TO BE GRASSED SHALL BE SCARIFIED AND CULTIVATED TO A DEPTH OF 3 INCHES, WITH ALL CLODS OR CLUMPS BROKEN UP AND FOREIGN MATERIAL AND DEBRIS REMOVED. FERTILIZER SHALL BE APPLIED AT A MINIMUM RATE OF 1,000 LB/ ACRE. LIME SHALL BE REMOVED. FERTILIZER
SHALL BE APPLIED AT A MINIMUM RATE OF 3,000 LBS/ACRE. FERTILIZER AND LIME SHALL BE THOROUGHLY WORKED INTO THE SOIL, AND THE SURFACE RAKED SMOOTH BEFORE APPLYING SEED. SEED SHALL BE APPLIED
AT THE MINIMUM RATE OF 130 LBS/ACRE AND RAKED IN LIGHTLY. SEEDED AREAS SHALL BE DRESSES SMOOTH, THEN MULCH (STRAW) APPLIED AT 4,000 LBS/ACRE. AREAS SHALL BE SPRAYED WITH EMULSION TO BIND SEED AND PREVENT EROSION, IMMEDIATELY AFTER SEEDING.

STANDARD NOTES:

1. IF NECESSARY, SLOPES, WHICH EXCEED EIGHT (8) VERTICAL FEET SHOULD BE STABILIZED WITH SYNTHETIC OR VEGETATIVE MATS, IN ADDITION TO HYDROSEEDING. IT MAY BE NECESSARY TO INSTALL TEMPORARY SLOPE DRAINS DURING CONSTRUCTION. TEMPORARY BERMS MAY BE NEEDED UNTIL THE SLOPE IS BROUGHT TO GRADE.
2. STABILIZATION MEASURES SHALL BE INITIATED AS SOON AS PRACTICABLE IN PORTIONS OF THE SITE WHERE CONSTRUCTION ACTIVITIES HAVE TEMPORARILY OR PERMANENTLY CEASED, BUT IN NO CASE MORE THAN FOURTEEN (14) DAYS AFTER WORK HAS CEASED, EXCEPT AS STATED BELOW.
   >WHERE STABILIZATION BY THE 14TH DAY IS PRECLUDED BY SNOW COVER OR FROZEN GROUND CONDITIONS STABILIZATION MEASURES MUST BE INITIATED AS SOON AS PRACTICABLE.
   >WHERE CONSTRUCTION ACTIVITY ON A PORTION OF THE SITE IS TEMPORARILY CEASED, AND EARTH-DISTURBING ACTIVITIES WILL BE RESUMED WITHIN 14 DAYS, TEMPORARY STABILIZATION MEASURES DO NOT HAVE TO BE INITIATED ON THAT PORTION OF THE SITE.
3. ALL SEDIMENT AND EROSION CONTROL DEVICES SHALL BE INSPECTED EVERY SEVEN (7) DAYS. IF SITE INSPECTIONS IDENTIFY BMPS THAT ARE DAMAGED OR ARE NOT OPERATING EFFECTIVELY, MAINTENANCE MUST BE PERFORMED AS SOON AS PRACTICAL OR AS REASONABLY POSSIBLE AND BEFORE THE NEXT STORM EVENT WHENEVER PRACTICABLE.
4. PROVIDE SILT FENCE AND/OR OTHER CONTROL DEVICES, AS MAY BE REQUIRED, TO CONTROL SOIL EROSION DURING UTILITY CONSTRUCTION. ALL DISTURBED AREAS SHALL BE CLEANED, GRADED, AND STABILIZED WITH GRASSING IMMEDIATELY AFTER THE UTILITY INSTALLATION. FILL, COVER, AND TEMPORARY SEEDING AT THE END OF EACH DAY ARE RECOMMENDED. IF WATER IS ENCOUNTERED WHILE TRENCHING, THE WATER SHOULD BE FILTERED TO REMOVE ANY SEDIMENTS BEFORE BEING PUMPED BACK INTO ANY WATERS OF THE STATE.
5. ALL EROSION CONTROL DEVICES SHALL BE PROPERLY MAINTAINED DURING ALL PHASES OF CONSTRUCTION UNTIL THE COMPLETION OF ALL CONSTRUCTION ACTIVITIES AND ALL DISTURBED AREAS HAVE BEEN STABILIZED. ADDITIONAL CONTROL DEVICES MAY BE REQUIRED DURING CONSTRUCTION IN ORDER TO CONTROL EROSION AND/OR OFFSITE SEDIMENTATION. ALL TEMPORARY CONTROL DEVICES SHALL BE REMOVED ONCE CONSTRUCTION IS COMPLETE AND THE SITE IS STABILIZED.
6. THE CONTRACTOR MUST TAKE NECESSARY ACTION TO MINIMIZE THE TRACKING OF MUD ONTO PAVED ROADWAY(S) FROM CONSTRUCTION AREAS AND THE GENERATION OF DUST. THE CONTRACTOR SHALL DAILY REMOVE MUD/SOIL FROM PAVEMENT, AS MAY BE REQUIRED.
7. TEMPORARY DIVERSION BERMS AND/OR DITCHES WILL BE PROVIDED AS NEEDED DURING CONSTRUCTION TO PROTECT WORK AREAS FROM UPSLOPE RUNOFF AND/OR TO DIVERT SEDIMENT-LADEN WATER TO APPROPRIATE TRAPS OR STABLE OUTLETS.
8. LITTER, CONSTRUCTION DEBRIS, OILS, FUELS, AND BUILDING PRODUCTS WITH SIGNIFICANT POTENTIAL FOR IMPACT (SUCH AS STOCKPILES OF FRESHLY TREATED LUMBER) AND CONSTRUCTION CHEMICALS THAT COULD BE EXPOSED TO STORM WATER MUST BE PREVENTED FROM BECOMING A POLLUTANT SOURCE IN STORM WATER DISCHARGES.

SEQUENCE OF CONSTRUCTION OPERATIONS

1. RECEIVE NOTIFICATION OF NPDES COVERAGE FROM SCDHEC, COORDINATE PRE-CONSTRUCTION MEETING ON-SITE, AND NOTIFY SCDHEC EQC OFFICE AT LEAST 48 HOURS IN ADVANCE OF LAND DISTURBING ACTIVITIES.
2. INSTALL STABILIZED CONSTRUCTION ENTRANCE, SILT FENCE AND PERIMETER SOIL EROSION CONTROL MEASURES OUTSIDE AND IN SOFTBALL PARKING AREA. BEGIN PERFORMING WEEKLY SCDHEC SWPPP INSPECTIONS UNTIL SITE IS PERMANENTLY STABILIZED.
3. INSTALL SITE CONSTRUCTION FENCING. ACCESS TO EXISTING BUILDINGS AND PARKING LOT TO BE MAINTAINED AT ALL TIMES. COORDINATE WITH THE OWNER. BARRICADES TO BE PLACED AT THE ENDS OF ALL AREAS WHERE EXISTING PAVEMENT IS TO BE REMOVED AND AT THE END OF THE ACCESS ROAD BEHIND THE SOFTBALL STADIUM.
4. DEMOLISH ITEMS AS NOTED AND CLEAR AND GRUB SITE IN THE AREAS OF SOFTBALL STADIUM. REMOVE AND DISPOSE OFFSITE.
5. STRIP AND STOCKPILE TOPSOIL AND STABILIZE STOCKPILES AS NOTED IN THE PLANS.
6. WORK PERFORMED OUTSIDE THE LIMITS OF THE SITE FENCE IN THE PARKING LOT SHALL BE DONE IN A MANNER TO STABILIZE THE SOIL OR PLACE PAVEMENT AS SOON AS POSSIBLE TO MINIMIZE DAMAGE TO THE EXISTING PAVEMENT AND TO MINIMIZE TRACKING OF SEDIMENT INTO THE EXISTING PARKING LOT OR SOUTH MARION STREET.
7. PERFORM GRADING OPERATIONS ON THE SITE, INSTALLING STORM DRAINAGE STRUCTURES IN CONJUNCTION WITH GRADING.
8. INSTALL EROSION CONTROL DEVICES AS REQUIRED OR NEEDED AS STORM DRAINAGE STRUCTURES ARE EXTENDED TO FINISHED GRADE.
9. STOCKPILE UNUSED MATERIAL AND STABILIZE AS NOTED IN THE PLANS.
10. REAPPLY TOPSOIL AND INITIATE PERMANENT VEGETATIVE STABILIZATION MEASURES AS FINAL GRADE IS REACHED IN AREAS TO REMAIN UNDEVELOPED.
11. CONSTRUCT REMAINDER OF PROJECT IMPROVEMENTS.
12. FINE GRADE AND INSTALL PERMANENT SITE STABILIZATION MEASURES.
13. MAINTAIN ALL TEMPORARY CONTROL MEASURES UNTIL THE SITE IS COMPLETELY STABILIZED.
14. UPON COMPLETE STABILIZATION OF SITE, REMOVE ALL TEMPORARY EX MEASURES AND SUBMIT NOTICE OF TERMINATION (NOT) TO SCDHEC.

14 DAY STABILIZATION CLAUSE

ALL DISTURBED AREAS WHICH ARE TO BE LEFT IDLE FOR A PERIOD OF 14 DAYS OR LONGER ARE TO RECEIVE TEMPORARY VEGETATION OR MULCH.

EROSION CONTROL MAINTENANCE SCHEDULE

ALL SEDIMENT AND EROSION CONTROLS ARE TO BE INSPECTED AT LEAST ONCE EVERY SEVEN (7) CALENDAR DAYS AND AFTER ANY STORM EVENT OF 0.5 INCHES OR GREATER OF PRECIPITATION DURING ANY 24-HOUR PERIOD. DOCUMENT WITH INSPECTION REPORTS.

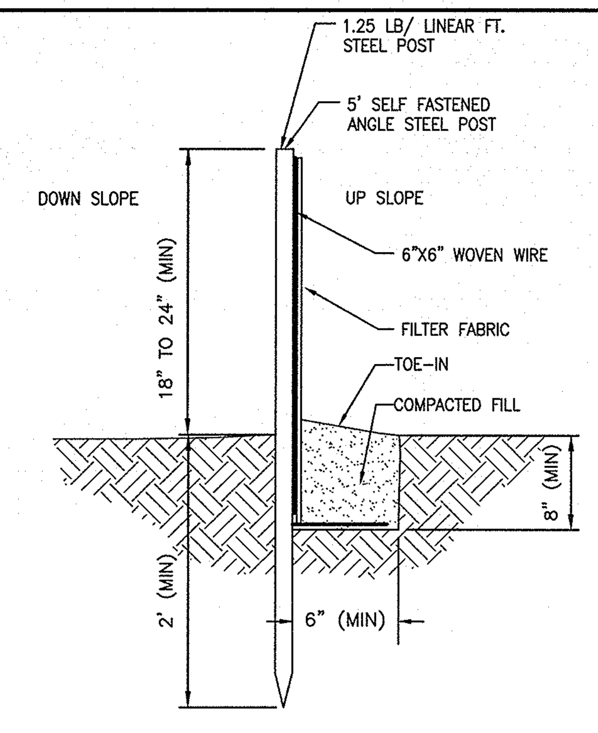

TYPE 1

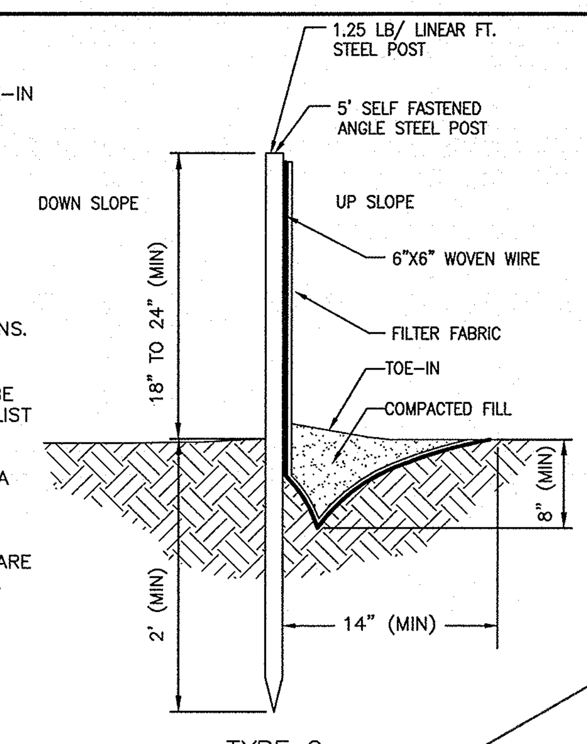

TYPE 2

NOTES:

1. USE TYPE 1 IN ALL OTHER CASES. USE TYPE 2 IN AREAS WHERE TOE-IN CUT TRENCH IS DIFFICULT TO EXCAVATE.
2. INSTALL POSTS AT 6' MAXIMUM SPACING.
3. USE WOVEN WIRE WHEN WETLANDS ARE WITHIN 50' OF FENCE.
4. DOUBLE ROW SILT FENCE TO BE PLACED WHERE INDICATED ON PLANS. FENCES SHALL BE 3' APART.
5. SYNTHETIC FILTER FABRIC SHALL BE ON SCDOT APPROVED MATERIALS LIST #34.
6. FILTER FABRIC SHALL BE CUT TO A MINIMUM WIDTH OF 36 INCHES.
7. ATTACH FABRIC TO STEEL POSTS USING HEAVY PLASTIC TIES THAT ARE EVENLY SPACED AND PLACED IN A MANNER TO PREVENT SAGGING OR TEARING OF THE FABRIC. TIES SHOULD BE AFFIXED IN NO LESS THAN 4 PLACES.
8. CONTRACTOR SHALL PERFORM INSPECTION AND MAINTENANCE OF SILT FENCES WITHIN 24 HRS FOLLOWING A RAINFALL EVENT THAT PRODUCES ½" OR MORE OF PRECIPITATION ENSURING FENCES ARE ERECT AND CLEAR, AND REPLACING ALL TORN FENCING.

SILT FENCE WITH WIRE FABRIC DETAIL (2 TYP)
SCALE: NONE

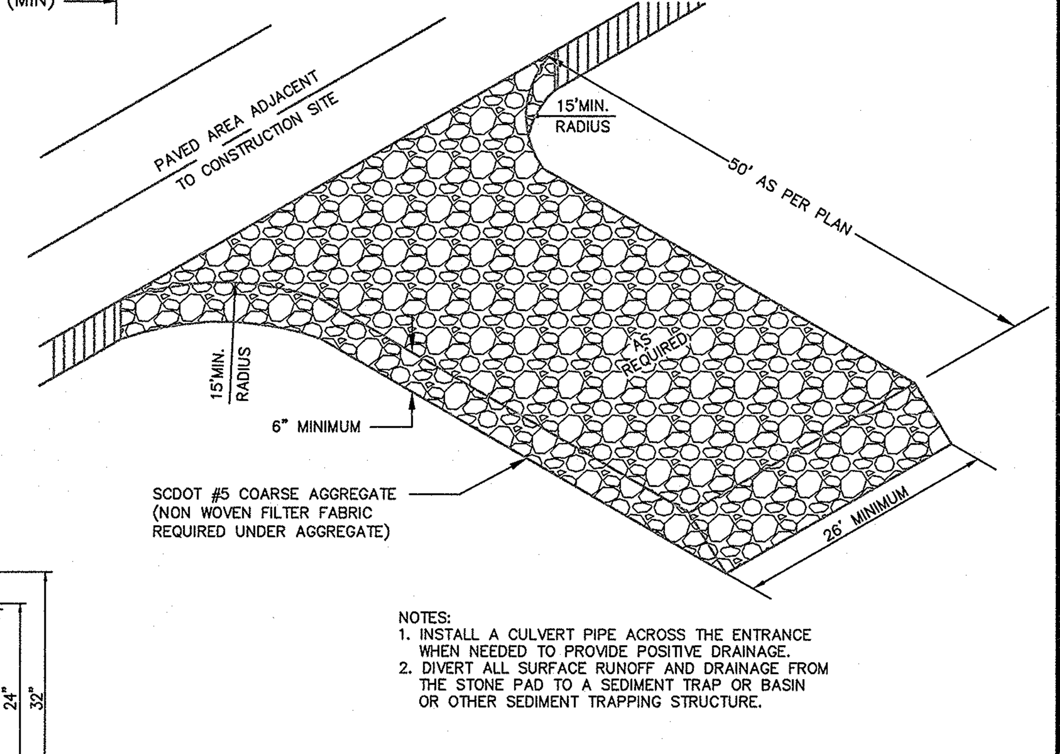

NOTES:
1. INSTALL A CULVERT PIPE ACROSS THE ENTRANCE WHEN NEEDED TO PROVIDE POSITIVE DRAINAGE.
2. DIVERT ALL SURFACE RUNOFF AND DRAINAGE FROM THE STONE PAD TO A SEDIMENT TRAP OR BASIN OR OTHER SEDIMENT TRAPPING STRUCTURE.

STABILIZED CONSTRUCTION ENTRANCE (5 TYP)
NOT TO SCALE

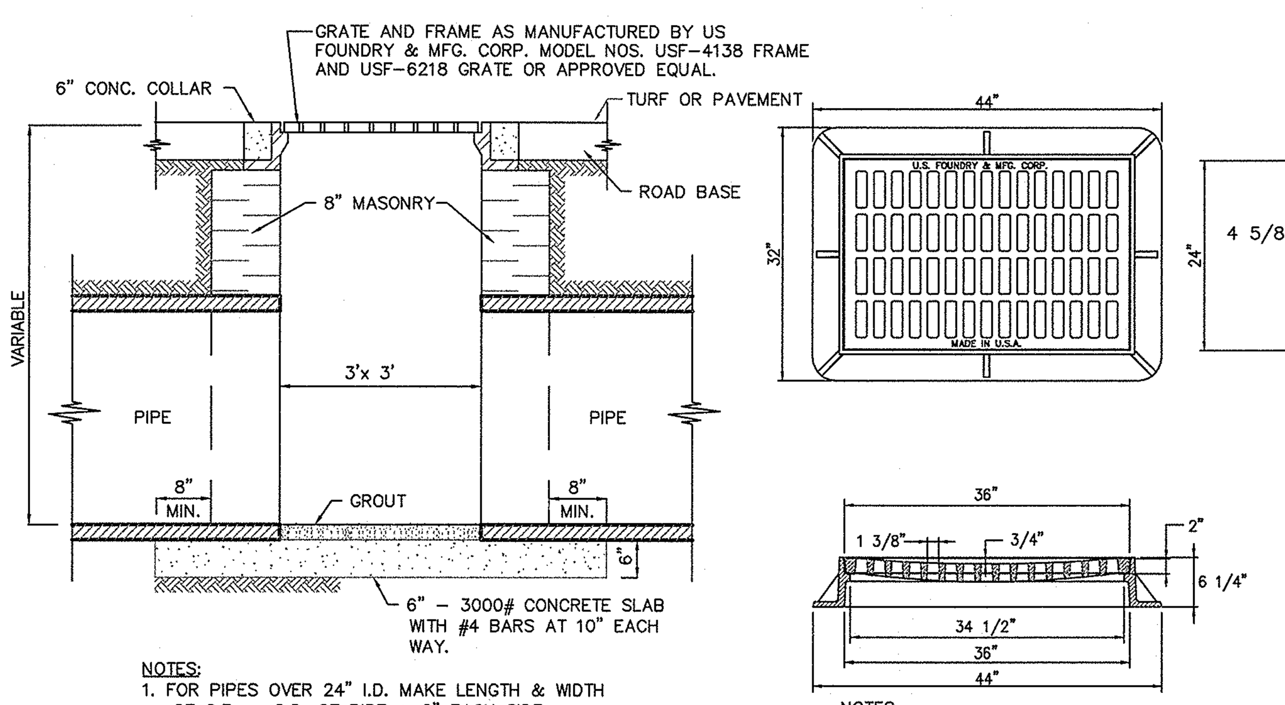

NOTES:
1. FOR PIPES OVER 24" I.D. MAKE LENGTH & WIDTH OF C.B. = O.D. OF PIPE + 6" EACH SIDE.
2. GRATE MODEL NO. USF-6218 (24"x36") TO BE INSTALLED WITH THE LONGEST SIDE PARALLEL TO THE DIRECTION OF FLOW.

NOTES:
USF 4138 FRAME & 6218 GRATE
1– MATERIAL: ASTM-A48 CLASS 35B GRAY IRON.
2– FRAME WT. 265 LBS. APP.
3– GRATE WT. 225 LBS. APP.

DROP INLET (3 TYP)
NOT TO SCALE

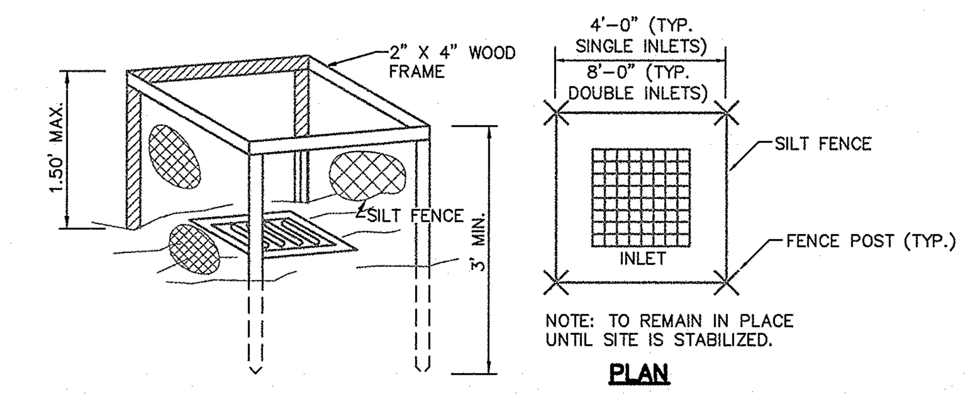

NOTE: TO REMAIN IN PLACE UNTIL SITE IS STABILIZED.

PLAN

TEMPORARY INLET PROTECTION (6 TYP)
NOT TO SCALE

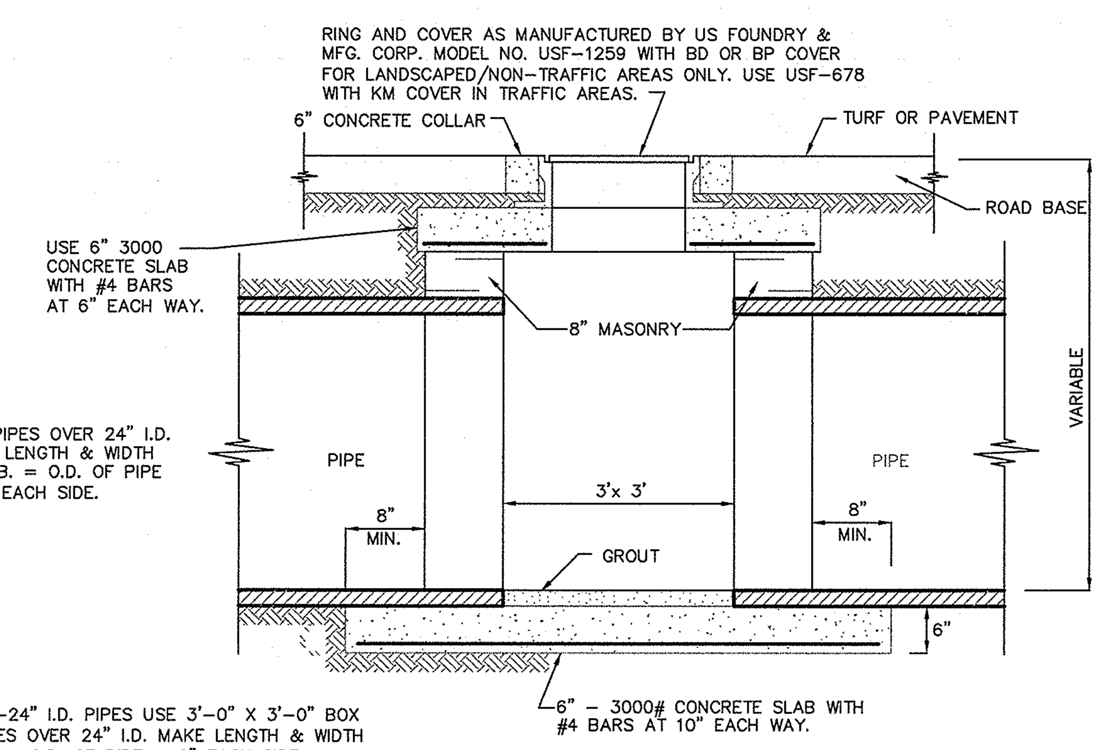

NOTES:
1. FOR 18"-24" I.D. PIPES USE 3'-0" X 3'-0" BOX
2. FOR PIPES OVER 24" I.D. MAKE LENGTH & WIDTH OF C.B. = O.D. OF PIPE + 6" EACH SIDE.
3. RING AND COVER AS MANUFACTURED BY US FOUNDRY & MFG. CORP. MODEL NO. USF-1259 WITH BD OR BP COVER FOR LANDSCAPED OR NON-TRAFFIC AREAS ONLY. USE USF678 WITH KM COVER IN TRAFFIC AREAS.
4. ALL CATCH BASINS MUST HAVE A 3'-0" X 3'-0" FINISHED OPENING.
5. STEPS ARE REQUIRED IN MANHOLES 4' DEEP OR DEEPER FROM LID. STEPS ARE 12" ON-CENTER. (STEPS MUST CONFORM TO ASTM-C-478 OR EQUIVALENT)

JUNCTION BOX (4 TYP)
NOT TO SCALE

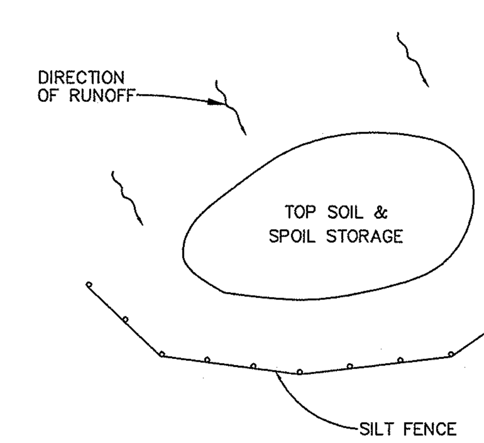

TOP SOIL & SPOIL STORAGE DETAIL (7 TYP)
NOT TO SCALE

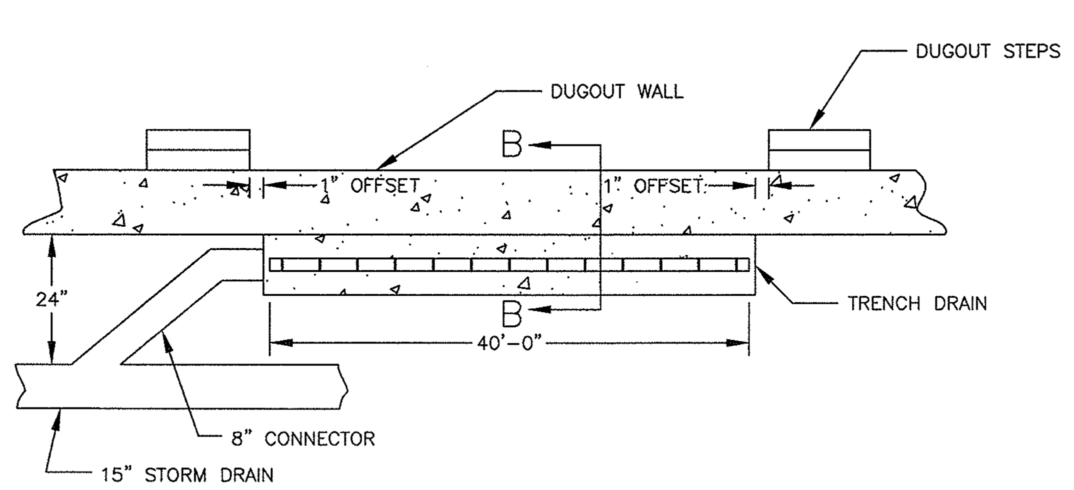

PLAN
NOT TO SCALE

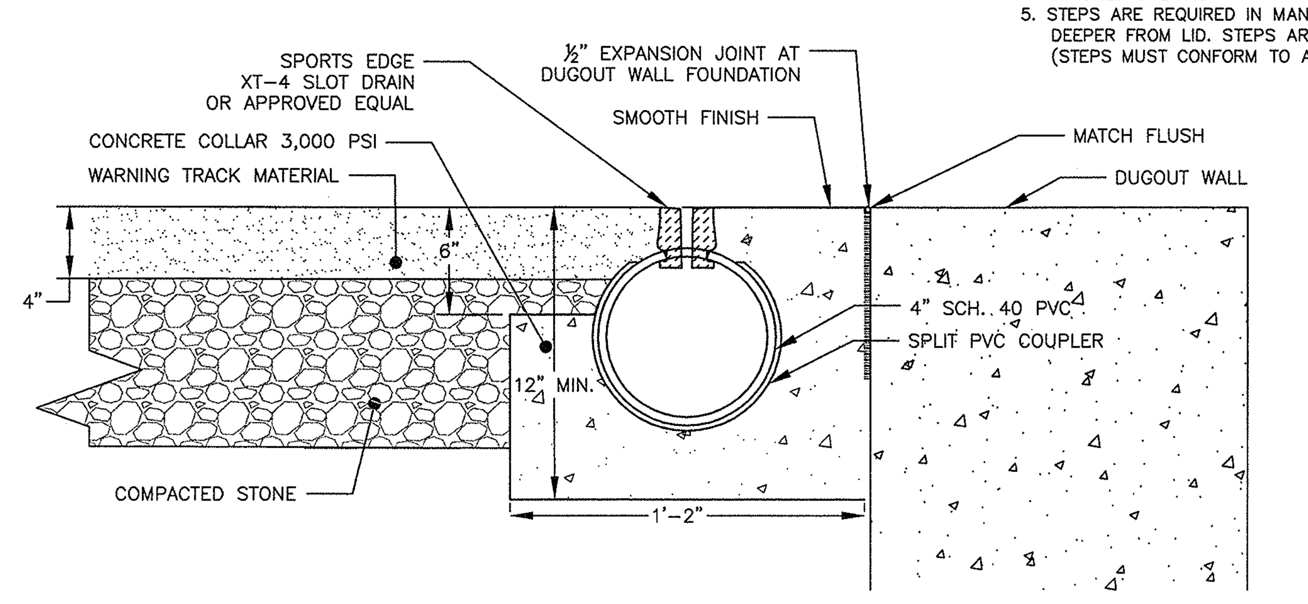

SECTION
NOT TO SCALE

TRENCH DRAIN (1 TYP)
NOT TO SCALE

QUACKENBUSH ARCHITECTS+PLANNERS
1217 Hampton Street T: 803.771.2999
Columbia, SC 29201 F: 803.771.2858

CHA
III Winners Circle T: 518.453.4500
Albany, NY 12205 F: 518.458.1735

URS | BP Barber
101 RESEARCH DRIVE
COLUMBIA, SC
29203-9389
803-254-4400

CORPORATE SEAL
SOUTH CAROLINA B.P. BARBER & ASSOCIATES, INC. No. C00020 CERTIFICATE OF AUTHORIZATION

3-30-12
DATE

A/E SEAL
SOUTH CAROLINA REGISTERED PROFESSIONAL ENGINEER No. 23633 CHRISTOPHER CHARLES SMITH

SIGNATURE

PROJECT TITLE

UNIVERSITY OF SOUTH CAROLINA

SOFTBALL STADIUM CONSTRUCTION

BID SET

Conditions of Use: This drawing and the design thereon are the property of Quackenbush Architects + Planners. The reproduction, copying, or use of this drawing without the written consent of Quackenbush Architects + Planners is prohibited and any infringement will be subject to legal action.

REVISIONS

NO	REVISION	DATE

SHEET INFORMATION

Date	03.16.12
Project No.	11.122.00
Scale	1"=20'
Drawn By	SSJ
Checked By	CCS
State Project No.	H27-6088-MJ
URS/BPBarber Project#	46422193

TITLE

SITE DETAILS

DWG. NO. 35,870-B89

SHEET NO.

C-9

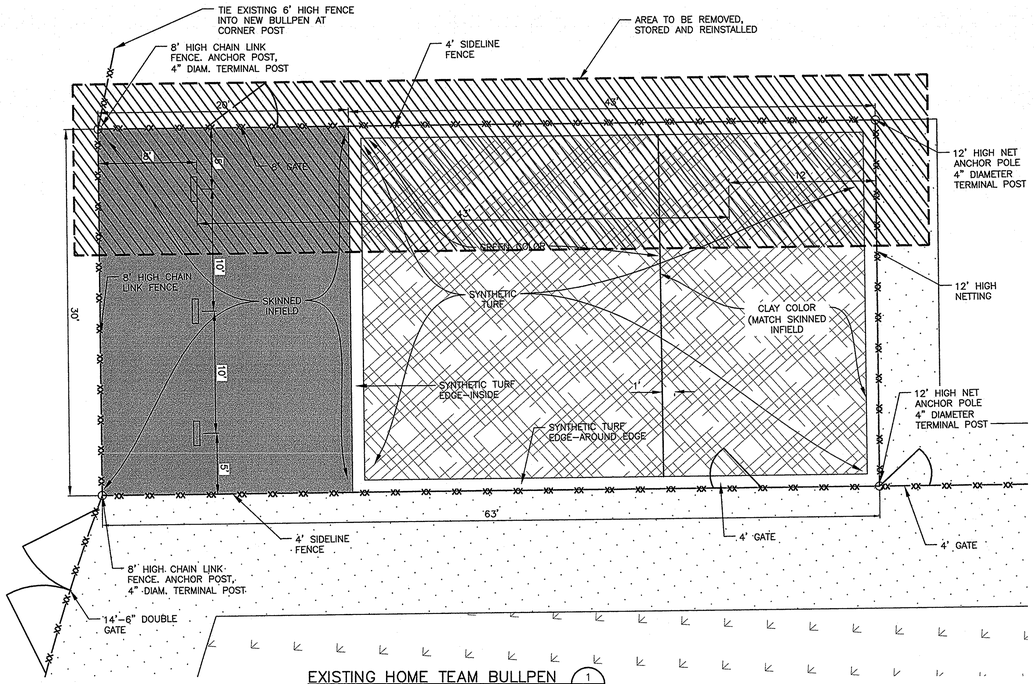

EXISTING HOME TEAM BULLPEN (1 TYP)
SCALE 1"=5'

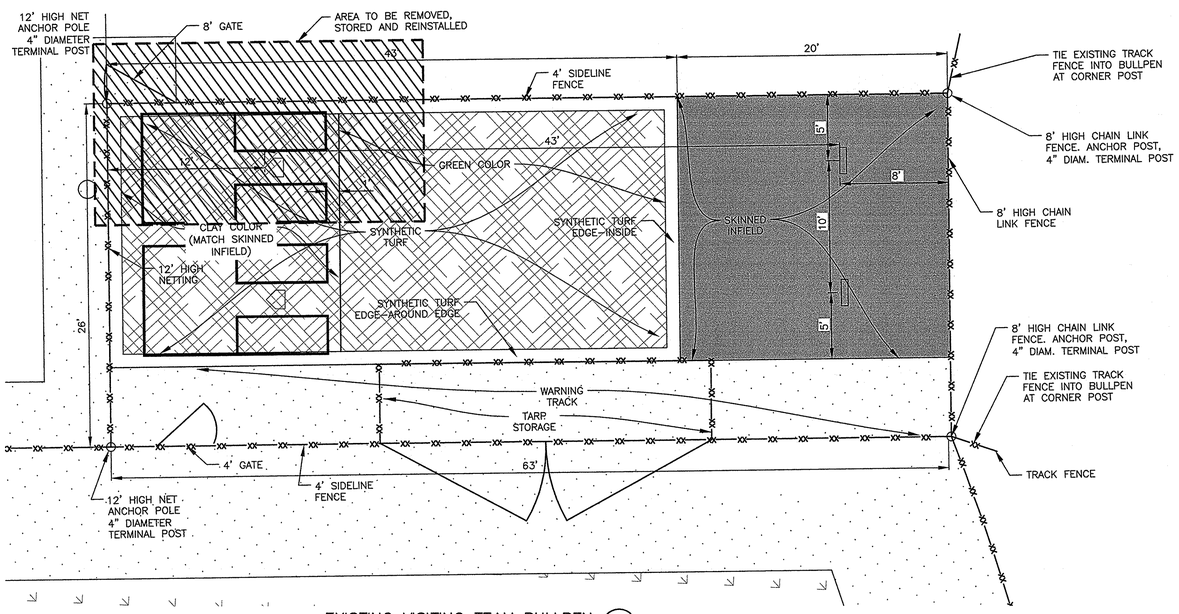

EXISTING VISITING TEAM BULLPEN (2 TYP)
SCALE 1"=5'

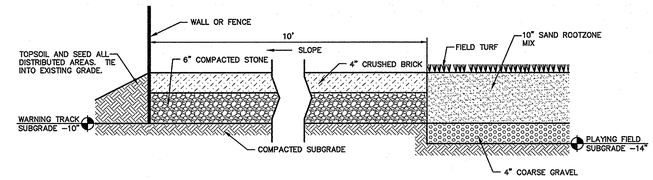

WARNING TRACK/SUBGRADE (3 TYP)
NOT TO SCALE

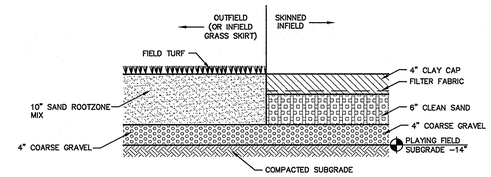

EXISTING SKINNED INFIELD (4 TYP)
NOT TO SCALE

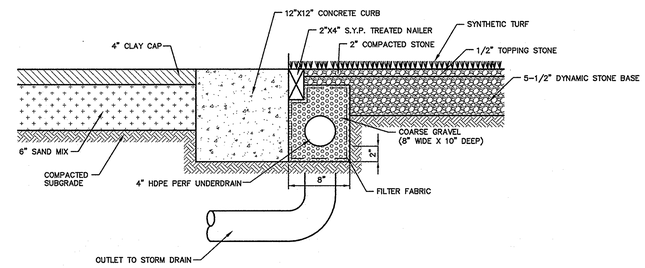

EXISTING SYNTHETIC TURF EDGE-INSIDE OF BULLPEN (5 TYP)
NOT TO SCALE

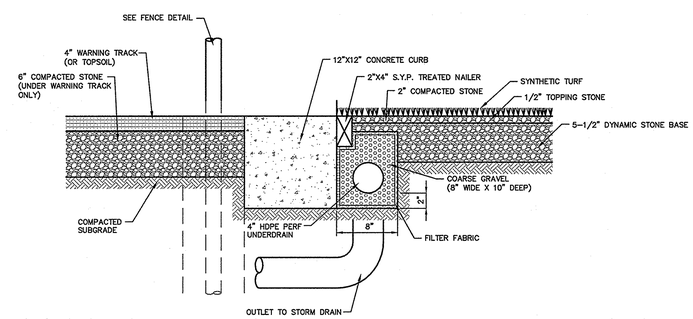

EXISTING SYNTHETIC TURF EDGE-AROUND EDGE OF BULLPEN (6 TYP)
NOT TO SCALE

QUACKENBUSH
ARCHITECTS+PLANNERS
1217 Hampton Street T: 803.771.2999
Columbia, SC 29201 F: 803.771.2858

CHA
III Winners Circle T: 518.453.4500
Albany, NY 12205 F: 518.458.1735

URS | BP Barber
101 RESEARCH DRIVE
COLUMBIA, SC
29203-9589
803-254-4400

CORPORATE SEAL

SOUTH CAROLINA B.P. BARBER & ASSOCIATES, INC. No. C000220 CERTIFICATE OF AUTHORIZATION

3-30-12
DATE

A/E SEAL

SOUTH CAROLINA REGISTERED PROFESSIONAL ENGINEER No. 23633 CHRISTOPHER CHASE HILL

SIGNATURE

PROJECT TITLE

UNIVERSITY OF SOUTH CAROLINA

SOFTBALL STADIUM CONSTRUCTION

BID SET

Conditions of Use: This drawing and the design thereon are the property of Quackenbush Architects + Planners. The reproduction, copying, or use of this drawing without the written consent of Quackenbush Architects + Planners is prohibited and any infringement will be subject to legal action.

REVISIONS

NO	REVISION	DATE

SHEET INFORMATION	
Date	03.16.12
Project No.	11.122.00
Scale	1"=20'
Drawn By	SSJ
Checked By	CCS
State Project No.	H27-6088-MJ
URS/BPBarber Project#	46422193

TITLE

SITE DETAILS

DWG. NO. 35,870-B89

SHEET NO.

C-10